Congressional Research Service
Informing the legislative debate since 1914

Departmental Organization, 1947-2003

August 12, 2003

Congressional Research Service
https://crsreports.congress.gov
RL31472

CRS REPORT
Prepared for Members and
Committees of Congress

Summary

Since the end of World War II, nine federal departments have been created in the executive branch. The tables in this report provide selected information on the organization of those departments.

Contents

Figures

Figure 1. Executive Branch Energy Reorganization, 1973-1977 8

Tables

Table 1. Department Establishment, 1947-2003 2
Table 2. Confirmation Rates on Department Secretaries for Newly Organized Departments 6

Contacts

Author Information..... 9

Departmental Organization, 1947-2001

Congress, when considering proposals to establish a Department of Homeland Security, studied the histories of other major federal agencies and departments as possible templates for structures and administrative policies that worked and those that required adjustment.

The tables that follow offer selected basic information common to all the departments[1] created since the end of World War II. For each, **Table 1** provides a citation to the enabling legislation, on-board staffing as it was established and as of September 30, 2001, the budget for the first fiscal year, the estimated budget for FY2003 and the FY2004 request, brief information on the authorities or responsibilities moved to the department in the organic act from other federal entities, and a statement on the new authorities or responsibilities added by the organic act. **Table 2**, while also including the enabling citations, provides the name of the first secretary, holdover status, nomination and confirmation dates, and the time lapse between Senate receipt of the nomination and confirmation action.

Following the tables is an organizational flow chart presenting the history of agency movement before and during the creation of the Department of Energy.

[1] In order of creation: Department of Defense; Department of Health, Education, and Welfare; Department of Housing and Urban Development; Department of Transportation; Department of Energy; Department Health and Human Services; Department of Education; Department of Veterans Affairs, and Department of Homeland Security.

Table 1. Department Establishment, 1947-2003

Department	Enabling Legislation and Date	On-Board Staffing f	Budget (2003 estimate; 2004 request)	Authorities or responsibilities moved to the department in the organic act from other federal entities	New authorities or responsibilities added by the organic act
Defense	National Security Act of 1947 (10 U.S.C. 111) (61 Stat. 495) July 26, 1947a	1947 (June 30) Military - 1,582,999 Civilian - 836,085 2003 Military - 1,453,485 Civilian - 664,446	FY1950 $16.5 billion FY2003 $364.0 billion FY2004 $379.6 billion	Single cabinet-level Dept. of Defense (DOD) established; previous cabinet-level Departments of War (renamed Dept. of the Army) and Navy became subordinate to DOD.	Independent U.S. Air Force/Dept. of the Air Force established out of the U.S. Army Air Forces; new Central Intelligence Agency authorized.
Health, Education, and Welfare	Reorganization Plan No. 1 (5 U.S.C. app.) April 11, 1953 Reformed as the Department of Health and Human Services in 1979	1953 36,320	FY1954 $1.9 billion	Converted from Federal Security Agency. The name was changed, the Secretary automatically became a Cabinet member, and the President was authorized to appoint the undersecretary, three new assistant secretaries, and a general counsel, all subject to Senate confirmation.[b]	Nothing new added to the department by transfer from other parts of government.
Housing and Urban Development HUD (continued)	Housing and Urban Development Act P.L. 89-174 (79 Stat. 667) Sept. 9, 1965 (42 U.S.C. 3532-3537) Although the legislation was signed Sept. 9, HUD did not officially become a department until midnight on Nov. 8, 1965.	1966 14,094 2003 10,643	FY1967 $3.1 billion FY2003 $34.5 billion FY2004 $35.0 billion	The HUD Secretary was given all the powers, functions, and duties of the Housing and Home Finance Agency and its components, which consisted of an Office of the Administrator, the Federal Housing Administration, the Public Housing Administration, the Federal National Mortgage Association, the Community Facilities Administration, and the Urban Renewal Administration.[c]	The Secretary was instructed to advise the President with respect to federal programs and activities relating to housing and urban development. He was to develop and recommend urban policies; provide assistance to local areas concerning community and metropolitan development problems; consult and cooperate with states; hold public hearings; encourage comprehensive state and local planning; encourage private enterprise; and conduct continuing comprehensive studies.

Department	Enabling Legislation and Date	On-Board Staffing f	Budget (2003 estimate; 2004 request)	Authorities or responsibilities moved to the department in the organic act from other federal entities	New authorities or responsibilities added by the organic act
Transportation Transportation (continued)	Department of Transportation Act (49 U.S.C. 102) (96 Stat. 2414) October 15, 1966	1967 58,882 2003 58,819	FY1968 $6.1 billion FY2003 $53.6 billion FY2004 $54.2 billion	Agencies initially included: – U.S. Coast Guard from Dept. of Treasury. – Federal Aviation Administration from independent Federal Aviation Agency. – Federal Highway Administration; highway programs from Bureau of Public Roads, traffic (automotive) safety programs from National Traffic Safety Agency, highway safety programs from National Highway Safety Agency, all from Dept. of Commerce; and motor carrier safety programs from Interstate Commerce Commission. – Federal Railroad Administration; Alaska Railroad from Dept. of Interior; rail safety activities from the Bureau of Railroad Safety and Service in the Interstate Commerce Commission; and Office of High Speed Ground Transportation from Dept. of Commerce. Later additions from other depts.: – Urban Mass Transportation Administration (now the Federal Transit Administration) from Dept. of Housing and Urban Development in 1968. The DOT Act required that the Secretary of Transportation and the Secretary of HUD make a recommendation as to where transit should be located administratively. A recommendation was made and enacted in the following year. – Maritime Administration transferred from the Dept. of Commerce by the Maritime Act of 1981.	The Office of the Secretary of Transportation was charged with developing and implementing national transportation policy. The National Transportation Safety Board was created as an independent agency by the DOT Act. It assumed the accident investigation powers formerly located in the Bureau of Aviation Safety of the Civil Aeronautics Board.
Energy Energy (continued)	Energy Organization Act (42 U.S.C. 7131) (91 Stat. 565) August 4, 1977	1977 19,647 (Oct. 1) 2003 15,789	FY1978 $10.467 billion FY2003 $20.0 billion FY2004	Movement of agencies and functions in the new Department of Energy reflected actions taken through the Federal Energy Administration Act of 1974 (P.L. 93-275), the Energy Reorganization Act of 1974 (P.L. 93-438), and departmental enabling legislation: research and waste activities of the Atomic Energy Commission to Energy Research and Development Administration (ERDA) in 1974 and ERDA to DOE in 1977; Cost of Living Council (Energy Division); Dept. of Commerce (Industrial Energy Conservation Program); Dept. of Defense (Division of	—

Department	Enabling Legislation and Date	On-Board Staffing f	Budget (2003 estimate; 2004 request)	Authorities or responsibilities moved to the department in the organic act from other federal entities	New authorities or responsibilities added by the organic act
			$21.2 billion	Military Applications, Division of Naval Reactors, Naval Petroleum Reserves); Dept. of the Interior (Bureau of Mines—fossil fuel research, Office of Coal Research, Office of Energy Conservation, Office of Energy Data and Analysis, Office of Oil and Gas, Office of Petroleum Allocation, Power Marketing Administrations); Environmental Protection Agency (electric and alternative vehicle R&D); Energy Policy Office; Federal Energy Administration, later the Federal Energy Office; Federal Power Commission; Department of Housing and Urban Development (energy conservation standards for new buildings); Interstate Commerce Commission (oil pipeline regulation); and National Science Foundation (geothermal solar heating research).	
Health and Human Services	Department of Education Organization Act (20 U.S.C. 3508) (93 Stat. 695) October 17, 1979	1980 155,662 2003 67,091	FY1981 $80.788 billion FY2003 $507.8 billion FY2004 $537.7 billion	When the Department of Education was created, the remaining portion of the Department of Health, Education, and Welfare was redesignated as the Department of Health and Human Services. (Sec. 509 of the Act)	—
Education	Department of Education Organization Act (20 U.S.C. 3411) (93 Stat. 671) October 17, 1979	1980[d] 7,364 2003 4,592	FY1981 $14.725 billion FY2003 $60.5 billion FY2004 $61.4 billion	– Elementary and Secondary Education – Postsecondary Education – Vocational and Adult Education – Special Education and Rehabilitative Services – Educational Research and Improvement – Bilingual Education and Minority Languages Affairs – Office for Civil Rights	No significant new authorities or responsibilities.

Department	Enabling Legislation and Date	On-Board Staffing f	Budget (2003 estimate; 2004 request)	Authorities or responsibilities moved to the department in the organic act from other federal entities	New authorities or responsibilities added by the organic act
Veterans Affairs	Veterans Affairs Act (38 U.S.C. 201) (102 Stat. 2635) March 15, 1989	1989 245,992 2003 225,159	FY1990 $29.2 billion FY2003 $57.6 billion FY2004 $61.4 billion	All functions of the Veterans Administration were transferred to the department.	Added 40 full- time inspectors general to existing IGs. Made Secretary and 11 top positions presidential appointments subject to Senate confirmation, vs. previous situation of Administrator, Deputy Administrator, and IG being only presidential appointments subject to Senate confirmation.[e]
Homeland Security	Homeland Security Act of 2002 (6 U.S.C. 101, note) (116 Stat. 2135) Nov. 25, 2002	2003 151,813	FY2003 $25.3 billion FY2004 $28.0 billion	Twenty-two agencies or programs were transferred from the Department of the Treasury, the Department of Transportation, the Department of Justice, the Department of Health and Human Services, the Department of Agriculture, the Department of Energy, the Department of Defense, the Department of State, and the Federal Emergency Management Agency.	The overarching responsibilities of the department are to prevent terrorist attacks within the United States and to reduce the vulnerability of the United States to terrorist activities. The Secretary is charged with those responsibilities on both the federal and federal-state-locality coordinative platforms. [g]

Note: Contributors to Table 1: Robert Goldich, Susan Watkins Greenfield (Health, Education, and Welfare and Health and Human Services), Jim Riehl (Housing and Urban Development), John Fischer (Transportation), Carl Behrens (Energy), Paul Irwin (Education), Gary Reynolds (Veterans' Affairs), and Sharon Gressle (Homeland Security).

[a] The National Security Act Amendments of 1949 (63 Stat. 578; August 10, 1949) redesignated the National Military Establishment as the Department of Defense and established it as an executive department.

[b] For further information, see The Department of Health, Education, and Welfare, by Rufus E. Miles Jr. (New York: Praeger, 1974).

[c] Congressional Quarterly, Inc., 1965, *CQ Almanac*, p. 382. Additional detail concerning the function of each of these agencies may be found in the 1965 *CQ Almanac*, p. 365.

[d] Department of Education full-time equivalents: 1980—7,700; and 2001—4,710. Full-time equivalent equals total number of hours worked in a 12-month period divided by 2080 (hours in a work year). This calculation captures all the time worked in a year, not the number of people employed at any given time.

[e] Archived CRS Report 87-919, *Proposals in the 100th Congress to Make the Veterans Administration a Cabinet-Level Department: Background Information and Analysis of Issues*, by Anne C. Stewart (not available), and 1988 *CQ Almanac*.

[f] Staffing levels are provided for the end of the first fiscal year of operation and for the most current data available from the Department of Defense (uniformed military personnel) and the Office of Personnel Management (civilian), March 2003.

[g] For further information on the Department of Homeland Security, see CRS Report RL31493, *Homeland Security: Department Organization and Management–Legislative Phase*, by Harold C. Relyea and CRS Report RL31751, *Homeland Security: Department Organization and Management–Implementation Phase*, by Harold C. Relyea.

Table 2. Confirmation Rates on Department Secretaries for Newly Organized Departments

Department	Enabling Legislation and Date	Secretary	Holdover of Appointee	Date Received in Senate	Date Confirmed by Senate	Time Lapse from Reception to Confirmation
Defense	National Security Act (Army-Navy Unification Act) (10 U.S.C. 113) (61 Stat. 495) of July 26,1947[a]	James V. Forrestal	No	07/26/47	07/26/47	0
Health, Education, and Welfare	Reorganization Plan No. 1 (5 U.S.C. app.) (67 Stat. 631) of April 11, 1953	Oveta Culp Hobby	No	04/02/53	04/10/53[b]	8
Housing and Urban Development	Housing and Urban Development Act (42 U.S.C. 3532-3537) (79 Stat. 667) of November 9, 1965	Robert C. Weaver	No	01/14/66	01/17/66	3
Transportation	Transportation Act (49 U.S.C. 102) (96 Stat. 2414) of October 15, 1966	Alan Boyd	No	01/10/67	01/12/67	2
Energy	Energy Organization Act (42 U.S.C. 7131) (91 Stat. 569) of August 4, 1977, pursuant to E.O. 12009 of September 13, 1977[c]	James R. Schlesinger	No	08/04/77	08/05/77	1
Health and Human Services	Department of Education Organization Act (20 U.S.C. 3508) (93 Stat. 695) of October 17, 1979	Patrica Roberts Harris	Yes	07/20/79	08/03/79	14
Education	Department of Education Organization Act (20 U.S.C. 3411) (93 Stat. 671) of October 17, 1979	Shirley Mount Hufstedler	No	11/14/79	11/30/79	16
Veterans Affairs	Veterans Affairs Act (38 U.S.C. 201) (102 Stat. 2635) of March 15, 1989	Edward J. Derwinski[d]	Yes	01/20/89	03/02/89	41
Homeland Security	Homeland Security Act of 2002 (6 U.S.C. 101, note) (116 Stat. 2135) of Nov. 25, 2002	Thomas J. Ridge	No	01/07/03	01/22/03	15

Department	Enabling Legislation and Date	Secretary	Holdover of Appointee	Date Received in Senate	Date Confirmed by Senate	Time Lapse from Reception to Confirmation
Average Time Lapse:						11

Source: Table 2 created by Mitchel Sollenberger, Congressional Research Service, June 19, 2002.

[a] The National Security Act Amendments of 1949 (63 Stat. 578; August 10, 1949) redesignated the National Military Establishment as the Department of Defense and established it as an executive department.

[b] Appointment of Oveta Culp Hobby effective on April 11, 1953.

[c] Executive Order 12009 extends the effective date of the Energy Organization Act to October 1, 1977.

[d] Senate confirmed Edward J. Derwinski as both Secretary and Administrator of Veterans Affairs effective on March 2, 1989.

Figure 1. Executive Branch Energy Reorganization, 1973-1977

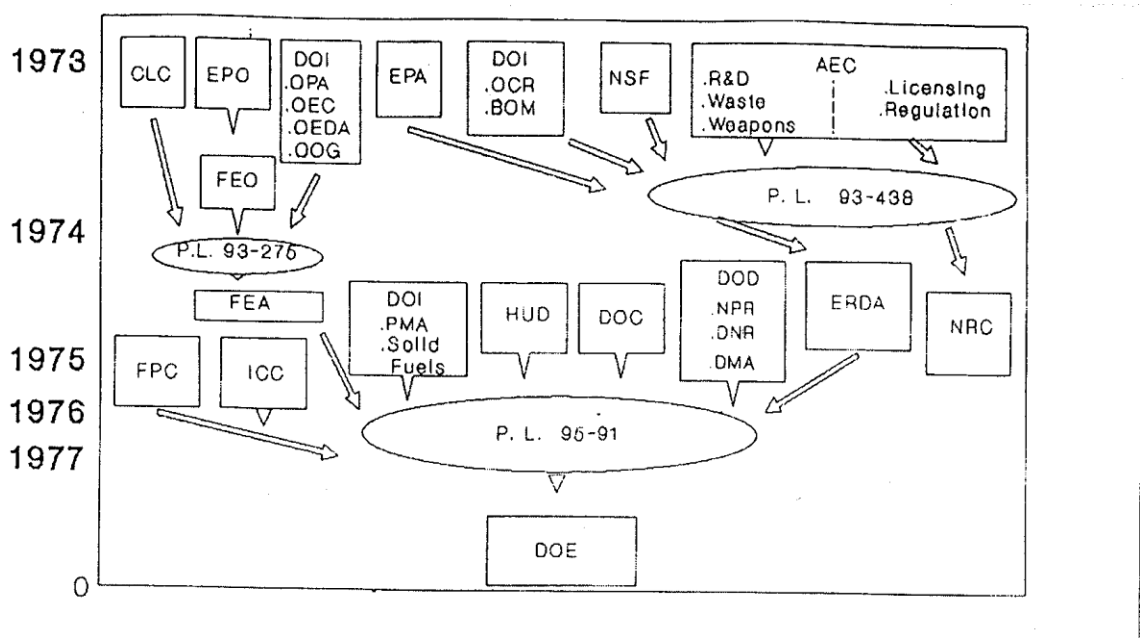

Note: Source unknown.

Laws

P.L. 93-275: Federal Energy Administration Act of 1974

P.L. 93-438: Energy Reorganization Act of 1974

P.L. 95-91: Department of Energy Organization Act

Agencies

AEC: Atomic Energy Commission

CLC: Cost of Living Council (Energy Division)

DOC: Department of Commerce (Industrial Energy Conservation Program)

DOD: Department of Defense

DMA: Division of Military Applications

DNR: Division of Naval Reactors

NPR: Naval Petroleum Reserves

DOI: Department of the Interior

BOM: Bureau of Mines (fossil fuel research) (moved in 1977)

OCR: Office of Coal Research

OEC: Office of Energy Conservation

OEDA: Office of Energy Data and Analysis

OOG: Office of Oil and Gas (moved in 1977)

OPA: Office of Petroleum Allocation

PMA: Power Marketing Administration

EPA: Environmental Protection Agency (electric and alternative vehicle R& D)

EPO: Energy Policy Office

ERDA: Energy Research and Development Administration

FEA: Federal Energy Administration

FEO: Federal Energy Office

FPC: Federal Power Commission

HUD: Department of Housing and Urban Development (energy conservation standards for new buildings)

ICC: Interstate Commerce Commission (oil pipeline regulation)

NRC: Nuclear Regulatory Commission

NSF: National Science Foundation (geothermal solar heating research)

Author Information

Sharon S. Gressle
Specialist in American National Government

Disclaimer

This document was prepared by the Congressional Research Service (CRS). CRS serves as nonpartisan shared staff to congressional committees and Members of Congress. It operates solely at the behest of and under the direction of Congress. Information in a CRS Report should not be relied upon for purposes other than public understanding of information that has been provided by CRS to Members of Congress in connection with CRS's institutional role. CRS Reports, as a work of the United States Government, are not subject to copyright protection in the United States. Any CRS Report may be reproduced and distributed in its entirety without permission from CRS. However, as a CRS Report may include copyrighted images or material from a third party, you may need to obtain the permission of the copyright holder if you wish to copy or otherwise use copyrighted material.