Congressional Research Service
Informing the legislative debate since 1914

Navy Lasers, Railgun, and Gun-Launched Guided Projectile: Background and Issues for Congress

Updated August 2, 2021

Congressional Research Service
https://crsreports.congress.gov
R44175

CRS REPORT
Prepared for Members and
Committees of Congress

Summary

This report provides background information and issues for Congress on three potential new ship-based self-defense weapons for the Navy—solid state lasers (SSLs), the electromagnetic railgun (EMRG), and the gun-launched guided projectile (GLGP), also known as the hypervelocity projectile (HVP).

The Navy's proposed FY2022 budget requests research and development funding for continued work on SSLs, but proposes suspending further work on the EMRG and GLGP programs and requests no research and development funding for them.

The Navy installed its first prototype SSL capable of countering surface craft and unmanned aerial vehicles (UAVs) on a Navy ship in 2014. The Navy since then has been developing and installing additional SSL prototypes with improved capability for countering surface craft and UAVs. Higher-power SSLs being developed by the Navy are to have a capability for countering anti-ship cruise missiles (ASCMs). Current Navy efforts to develop SSLs include

- the Solid State Laser Technology Maturation (SSL-TM) effort;
- the Optical Dazzling Interdictor, Navy (ODIN);
- the Surface Navy Laser Weapon System (SNLWS) Increment 1, also known as the high-energy laser with integrated optical dazzler and surveillance (HELIOS); and
- the High Energy Laser Counter-ASCM Program (HELCAP).

The first three SSL efforts listed above are included in what the Navy calls the Navy Laser Family of Systems (NFLoS).

The Navy had been developing EMRG since 2005. It was originally conceived as a naval surface fire support (NSFS) weapon for supporting Marines and other friendly forces ashore. Subsequently, it was determined that EMRG could also be used for air and missile defense, which for a time strengthened Navy interest in EMRG development.

As the Navy was developing EMRG, it realized that the guided projectile being developed for EMRG could also be fired from powder guns, including 5-inch guns on Navy cruisers and destroyers and 155 mm artillery guns operated by the Army and Marine Corps. The concept of firing the projectile from powder guns is referred to as GLGP and HVP.

Contents

Introduction 1
Issue for Congress 1
Scope of Report 1
Background 1
Strategic and Budgetary Context 1
Concern about Survivability of Navy Surface Ships 1
Depth of Magazine and Cost Exchange Ratio 2
Solid State Lasers (SSLs) 3
Overview 3
Earlier Developments 4
Development Roadmap 6
SSL-TM 7
ODIN 12
SNLWS Increment 1 (HELIOS) 16
HELCAP 21
Remaining Development Challenges 22
Electromagnetic Railgun (EMRG) and Gun-Launched Guided Projectile (GLGP) 22
FY2022 Budget Proposes Suspending Further Work on EMRG and GLGP 22
EMRG 23
GLGP 25
Remaining Development Challenges 32
Issues for Congress 32
Legislative Activity for FY2022 33
Summary of Congressional Action on FY2022 Funding 33
FY2022 DOD Appropriations Act (H.R. 4432) 34
House 34

Figures

Figure 1. Laser Weapon System (LaWS) on USS *Ponce* 5
Figure 2. Laser Weapon System (LaWS) on USS *Ponce* 5
Figure 3. Navy Laser Weapon Development Approach 6
Figure 4. ONR Graphic of SSL-TM Laser System 8
Figure 5. Navy Graphic of SSL-TM Laser System 9
Figure 6. Reported SSL-TM Laser Being Transported 10
Figure 7. Reported SSL-TM Laser Being Transported 10
Figure 8. Reported SSL-TM Laser Being Transported 11
Figure 9. Reported ODIN System on USS *Stockdale* 12
Figure 10. Reported ODIN System at Naval Support Facility Dahlgren 13
Figure 11. HELIOS System on DDG-51 Destroyer 17
Figure 12. HELIOS System on DDG-51 Destroyer 18
Figure 13. Industry-Built EMRG Prototype Demonstrator 24
Figure 14. Industry-Built EMRG Prototype Demonstrator 25

Figure 15. Photograph Showing HVP 27
Figure 16. HVP 28
Figure 17. HVP Launch Packages 29
Figure 18. HVP Application to Various Launchers 30
Figure 19. Navy Slide Depicting HVP Operations Against Various Target Types 31

Tables

Table 1. Summary of Congressional Action on FY2022 Funding 33

Appendixes

Appendix. Potential Advantages and Limitations of Shipboard Lasers 35

Contacts

Author Information 37

Introduction

Issue for Congress

This report provides background information and issues for Congress on three potential new ship-based self-defense weapons for the Navy—solid state lasers (SSLs), the electromagnetic railgun (EMRG),[1] and the gun-launched guided projectile (GLGP), also known as the hypervelocity projectile (HVP).

The Navy's proposed FY2022 budget requests research and development funding for continued work on SSLs, but proposes suspending further work on the EMRG and GLGP programs and requests no research and development funding for them.

The issue for Congress is whether to approve, reject, or modify the Navy's acquisition strategies and funding requests for these three potential new weapons. Congress's decisions on this issue could affect future Navy capabilities and funding requirements and the defense industrial base.

This report supersedes an earlier CRS report that provided an introduction to potential Navy shipboard lasers.[2]

Scope of Report

This report focuses on Navy efforts to develop SSLs, EMRG, and GLGP for potential use in defending Navy surface ships against surface craft, unmanned aerial vehicles (UAVs), and anti-ship missiles. It should be noted, though, that Navy surface ships could use SSLs, EMRG, and GLGP for performing other missions; that SSLs are being developed by multiple parts of the Department of Defense (DOD), not just the Navy;[3] and that SSLs, railguns, and GLGP have potential application to military aircraft and ground forces equipment, not just surface ships.

Background

Strategic and Budgetary Context

Concern about Survivability of Navy Surface Ships

Although Navy surface ships have a number of means for defending themselves against surface craft, UAVs, and anti-ship missiles,[4] some observers are concerned about the survivability of

[1] Railgun is also spelled as rail gun; EMRG is also abbreviated as EM railgun.

[2] CRS Report R41526, *Navy Shipboard Lasers for Surface, Air, and Missile Defense: Background and Issues for Congress*, by Ronald O'Rourke. This earlier CRS report has been archived and remains available as a supplementary reference source on potential Navy shipboard lasers.

[3] For a discussion of Army laser development programs, see CRS Report R45098, *U.S. Army Weapons-Related Directed Energy (DE) Programs: Background and Potential Issues for Congress*, by Andrew Feickert.

[4] These include the following: operating ships in ways that make it hard for others to detect and accurately track Navy ships; jamming or destroying enemy targeting sensors; interfering with the transmission of targeting data from sensors to weapon launchers; attacking missile launchers (which can be land-based launchers, ships, submarines, or aircraft); and countering missiles and UAVs headed toward Navy ships. Navy measures for countering missiles and UAVs headed toward Navy ships include the following: jamming a missile's or UAV's sensor or guidance system; using decoys of various kinds to lure enemy missiles away from Navy ships; and shooting down enemy missiles and UAVs

Navy surface ships in potential combat situations against adversaries, such as China, that are armed with large numbers of UAVs and anti-ship missiles, including advanced models.[5] Concern about this issue has led some observers to conclude that the Navy's surface fleet in coming years might need to avoid operating in waters that are within range of these weapons. Views on whether Navy surface ships can adequately defend themselves against UAVs and anti-ship missiles might influence perspectives on whether it would be cost effective to spend money on the procurement and operation of such ships.

Depth of Magazine and Cost Exchange Ratio

Two key limitations that Navy surface ships currently have in defending themselves against UAVs and anti-ship missiles are limited depth of magazine and unfavorable cost exchange ratios. Limited depth of magazine refers to the fact that Navy surface ships can use surface-to-air missiles (SAMs) and their Close-in Weapon System (CIWS) Gatling guns to shoot down only a certain number of enemy UAVs and anti-ship missiles before running out of SAMs and CIWS ammunition[6]—a situation (sometimes called "going Winchester") that can require a ship to withdraw from battle, spend time travelling to a safe reloading location (which can be hundreds of miles away),[7] and then spend more time traveling back to the battle area.

Unfavorable cost exchange ratios refer to the fact that a SAM used to shoot down a UAV or anti-ship missile can cost the Navy more (perhaps much more) to procure than it cost the adversary to build or acquire the UAV or anti-ship missile. Procurement costs for Navy air-defense missiles range from several hundred thousand dollars to a few million dollars per missile, depending on the type. In combat scenarios against an adversary with a limited number of UAVs or anti-ship missiles, an unfavorable cost exchange ratio can be acceptable because it saves the lives of Navy sailors and prevents very expensive damage to Navy ships. But in combat scenarios (or an ongoing military capabilities competition) against a country such as China that has many UAVs and anti-ship missiles and a capacity for building or acquiring many more, an unfavorable cost exchange ratio can become a very expensive—and potentially unaffordable—approach to defending Navy surface ships against UAVs and anti-ship missiles, particularly in a context of constraints on U.S. defense spending and competing demands for finite U.S. defense funds.

---

with surface-to-air missiles and the Phalanx Close-In Weapon System (CIWS), which is essentially a radar-controlled Gatling gun. Employing all these measures reflects a long-standing Navy approach of creating a multi-layered defense against enemy missiles, and of attacking the enemy's "kill chain" at multiple points so as to increase the chances of breaking the chain. (The kill chain is the sequence of steps that an enemy must complete to conduct a successful missile attack on a Navy ship. Interfering with any step in the sequence can break the kill chain and thereby prevent or defeat the attack.)

[5] For more on China's anti-ship missiles and UAVs, see CRS Report RL33153, *China Naval Modernization: Implications for U.S. Navy Capabilities—Background and Issues for Congress*, by Ronald O'Rourke. Enemy missiles are not the only reasons that some observers are concerned about the future survivability of U.S. Navy surface ships in combat situations; observers are also concerned about threats to U.S. Navy surface ships posed by small boats, mines, and torpedoes.

[6] Navy cruisers have 122 missile cells; Navy destroyers have 90 or 96 missile cells. Some of these cells are used for storing and launching Tomahawk land attack cruise missiles or anti-submarine rockets. The remainder are available for storing and launching SAMs. A Navy cruiser or destroyer might thus be armed with a few dozen or several dozen SAMs for countering missiles and UAVs. Countering missiles and UAVs with SAMs might sometimes require shooting two SAMs at each enemy missile.

[7] The missile cells on a Navy cruiser or destroyers are clustered together in an installation called a Vertical Launch System (VLS). VLS cells cannot be reloaded while the ship is underway; a ship needs to return to a port or a calm anchorage to reload its VLS.

SSLs, EMRG, and GLGP offer a potential for dramatically improving depth of magazine and the cost exchange ratio

- **Depth of magazine.** SSLs are electrically powered, drawing their power from the ship's overall electrical supply, and can be fired over and over, indefinitely, as long as the laser continues to work and the ship has fuel to generate electricity. EMRG projectiles and GLGPs can be stored by the hundreds in a Navy surface ship's weapon magazine.
- **Cost exchange ratio.** An SSL can be fired for a marginal cost of less than one dollar per shot (which is the cost of the fuel needed to generate the electricity used in the shot), while GLGP reportedly had an estimated unit procurement cost in 2018 of about $85,000.[8]

SSLs that have enough beam power to counter small boats and UAVs, but not enough to counter anti-ship cruise missiles (ASCMs), could nevertheless indirectly improve a ship's ability to counter ASCMs by permitting the ship to use fewer of its SAMs for countering UAVs, and more of them for countering ASCMs. Similarly, even though GLGPs fired from 5-inch powder guns might not be able to counter anti-ship ballistic missiles (ASBMs), they could indirectly improve a ship's ability to counter ASBMs by permitting the ship to use fewer of its SAMs for countering ASCMs and more of its SAMs for countering ASBMs.

Solid State Lasers (SSLs)

Overview

The Navy in recent years has leveraged both significant advancements in industrial SSLs and decades of research and development work on military lasers done by other parts of DOD to make substantial progress toward deploying high-energy lasers (HELs)[9] on Navy surface ships. Navy surface ships would use high-energy SSLs initially for jamming or confusing (i.e., "dazzling") intelligence, surveillance, and reconnaissance (ISR) sensors, for countering small boats and UAVs, and potentially in the future for countering enemy anti-ship missiles as well. High-energy SSLs on Navy ships would generally be short-range defensive weapons—they would generally counter targets at ranges of about one mile to perhaps eventually a few miles.

In addition to a low marginal cost per shot and deep magazine, potential advantages of shipboard lasers include fast engagement times, an ability to counter radically maneuvering missiles, an ability to conduct precision engagements, and an ability to use lasers for graduated responses ranging from detecting and monitoring targets to causing disabling damage. Potential limitations of shipboard lasers relate to line of sight; atmospheric absorption, scattering, and turbulence (which prevent shipboard lasers from being all-weather weapons); an effect known as thermal blooming that can reduce laser effectiveness; countering saturation attacks; possible adversary use of hardened targets and countermeasures; and risk of collateral damage, including damage to

[8] Sources for cost figure for GLGP: Sydney J. Freedberg Jr., "$86,000 + 5,600 MPH = Hyper Velocity Missile Defense," *Breaking Defense*, January 26, 2018; Jared Keller, "The U.S. Military Has a New 'Bullet' That Attacks At Mach Six (with 100 Mile Range)," *National Interest*, February 3, 2018.

[9] In discussions of potential Navy shipboard lasers, a high-energy laser is generally considered to be a laser with a beam power of at least 10 kilowatts (kW). In addition to developing SSLs, the Navy has also performed research and development work on a different kind of laser, called the free electron laser (FEL). For background information on the FEL, see CRS Report R41526, *Navy Shipboard Lasers for Surface, Air, and Missile Defense: Background and Issues for Congress*, by Ronald O'Rourke.

aircraft and satellites and permanent damage to human eyesight, including blinding. These potential advantages and limitations are discussed in greater detail in the **Appendix**.

Earlier Developments

Earlier developments in the Navy's efforts to develop high-energy SSLs include the following:

- Between 2009 and 2012, the Navy successfully tested a prototype SSL called the Laser Weapon System (LaWS) against UAVs in a series of engagements that took place initially on land and subsequently on a Navy ship at sea. LaWS had a reported beam power of 30 kilowatts (kW).[10]
- Between 2010 and 2011, the Navy tested another prototype SSL called the Maritime Laser Demonstration (MLD) in a series of tests that culminated with an MLD installed on a Navy ship successfully engaging a small boat.
- In August 2014, the Navy installed LaWS on the USS *Ponce* (pronounced pon-SAY)—a converted amphibious ship that operated in the Persian Gulf as an interim Afloat Forward Staging Base (AFSB[I])[11]—to conduct evaluation of shipboard lasers in an operational setting against swarming boats and swarming UAVs (**Figure 1** and **Figure 2**).
- In December 2014, the Navy declared LaWS on the *Ponce* to be an "operational" system.[12] *Ponce* remained in the Persian Gulf until it was relieved in September 2017 by its replacement, the new-construction Expeditionary Sea Base ship *Lewis B. Puller* (ESB-3). *Ponce* returned to the United States and was decommissioned in October 2017, at which point LaWS was removed from Ponce. LaWS is to be refurbished to serve as a land-based test asset for the HELIOS effort discussed below.[13]

[10] See, for example, Mike McCarthy, "Navy Authorized To Use Ship-Based Laser In Battle," *Defense Daily*, December 11, 2014: 3.

[11] As an interim AFSB, *Ponce* operated in the Persian Gulf as a "mothership" for Navy helicopter and small boat operations. Ships referred to as AFSBs are now referred to as Expeditionary Sea Base ships (ESBs).

[12] Mike McCarthy, "Navy Authorized To Use Ship-Based Laser In Battle," *Defense Daily*, December 11, 2014: 3; Sam LaGrone, "U.S. Navy Allowed to Use Persian Gulf Laser for Defense," *USNI News*, December 10, 2014; Philip Ewing, "Navy Declares Laser Weapon 'Operational,'" *Politico Pro (Pro Defense Report)*, December 10, 2014; Statement of Rear Admiral Mathias W. Winter, United States Navy, Chief of Naval Research, Before the Emerging Threats and Capabilities Subcommittee of the House Armed Services Committee on The Fiscal Year 2017 Budget Request, February 24, 2016, p. 15.

[13] Source: Navy briefing to CRS and the Congressional Budget Office (CBO) on SNLWS program, April 27, 2018. For additional discussion of LaWS, see U.S. Navy, *U.S. Navy Program Guide 2017*, pp. 180-181, which refers to LaWS as the SSL-QRC (solid state laser—quick reaction capability).

Figure 1. Laser Weapon System (LaWS) on USS *Ponce*

Source: Navy photograph dated November 16, 2014, accompanying David Smalley, "Historic Leap: Navy Shipboard Laser Operates in Arabian Gulf," *Navy News Service*, December 10, 2014.

Figure 2. Laser Weapon System (LaWS) on USS *Ponce*

Source: Navy photograph dated November 17, 2014, accompanying David Smalley, "Historic Leap: Navy Shipboard Laser Operates in Arabian Gulf," *Navy News Service*, December 10, 2014.

Development Roadmap

The Navy is developing SSLs with improved capability for countering surface craft and UAVs, and eventually a capability for countering ASCMs. Navy efforts to develop these more-capable lasers (**Figure 3**) include

- the Solid State Laser Technology Maturation (SSL-TM) effort;
- the Optical Dazzling Interdictor, Navy (ODIN);
- the Surface Navy Laser Weapon System (SNLWS) Increment 1, also known as the high-energy laser with integrated optical dazzler and surveillance (HELIOS); and
- the High Energy Laser Counter-ASCM Program (HELCAP).

Figure 3. Navy Laser Weapon Development Approach

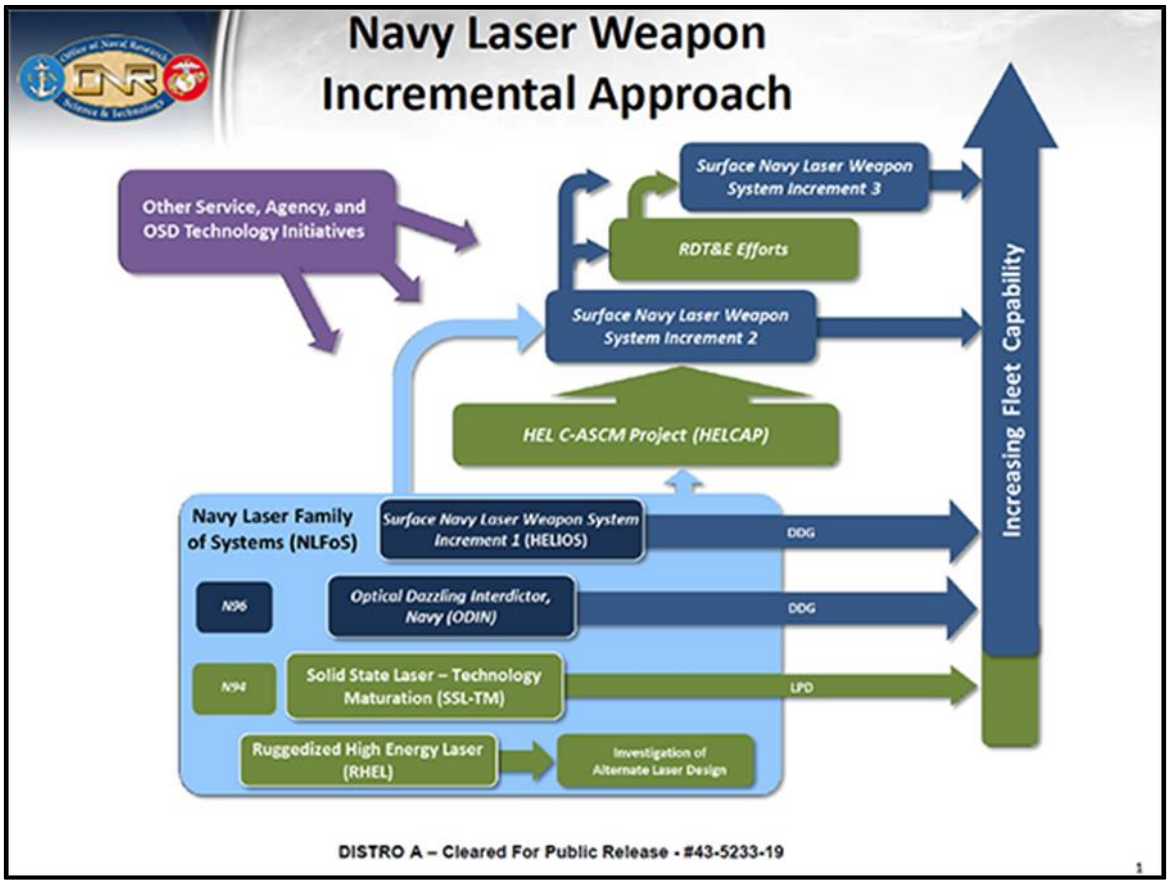

Source: Navy briefing slide provided by Navy Office of Legislative Affairs to CRS on May 6, 2019.

As shown in **Figure 3**, first three efforts above are included in what the Navy calls the Navy Laser Family of Systems (NFLoS). (The fourth NFLoS effort shown in **Figure 3**, the Ruggedized High Energy Laser (RHEL) effort, is now completed.) As also shown in **Figure 3**, under the Navy's laser development approach, NFLOS and HELCAP, along with technologies developed by other parts of DOD, are to support the development of future, more-capable lasers referred to as SNLWS Increment 2 and SNLWS Increment 3.

An October 29, 2019, press report states

> The Pentagon is pushing to double the power output of lasers, to over 300 kilowatts, so they can defeat a threat found in arsenals from the Russian army to the Chinese navy to Iran: cruise missiles.
>
> "The current technology for laser sources is in that 100-150 kw class," said Frank Peterkin, a senior scientist at the Office of Naval Research. "It's not enough. Even if you take all the other elements of a laser weapon and have them be perfect" – the targeting, the cooling, the beam control—"we still don't have enough power. It's a common enough problem, it makes sense to [approach] it in a joint fashion," Peterkin continued. "OSD's Dr. Karr…. is leading a joint DoD-wide initiative to scale up power levels, because we all need more power."…
>
> The Navy, which wants lasers on its ships, is probably the most enthusiastic of all. "The ability to take on cruise missiles—I'd say that is the predominant goal of the Navy's current efforts …using lasers for ship defense against anti-ship cruise missiles," Peterkin said….
>
> "We talk ad nauseam about power…because it's the easiest, simplest metric," Peterkin said. "It's certainly necessary but not sufficient.
>
> "We need to understand those targets better," Peterkin continued, "because the advantage of a laser weapon is precision, and the disadvantage of a laser weapon is precision." While a hit-to-kill missile like the modern Patriot will just crash into the target and smash it, a laser beam focuses precisely on a specific spot on the target and burns through. If you pick the wrong spot, you might not damage anything vital. If the spot you picked is tougher than your intelligence reports or your computer models said it was, you might not do enough damage in time.
>
> That's a particularly acute problem with supersonic cruise missiles, whose nose cones are already reinforced to survive the heat of friction from their rapid progress through the air. That makes these kinds of cruise missiles largely immune to a laser shooting them from dead ahead. It's much more effective for the laser to shoot the incoming cruise missile from the side, which in turn means the laser shouldn't be positioned right on top of the target, but nearby – for example on an escorting warship.
>
> That's why the service envisions its Surface Navy Laser Weapon System evolving in three stages, Peterkin said:
>
> - Increment 1 is the 60 kW HELIOS laser being installed on ships to destroy drones and cripple small attack craft;
>
> - Increment 2 will ramp up the power enough to take side shots against cruise missiles, so a ship with it installed can use it to defend other ships nearby, but not itself; and
>
> - Increment 3 will be still more powerful, able to burn through the nose-cone in a head-on shot, allowing a ship with it installed to defend itself.[14]

SSL-TM

The Navy's FY2022 budget submission states that the SSL Technology Maturation (SSL-TM) program "is developing an integrated Laser Weapons System Demonstrator (LWSD). SSL-TM will provide a new capability to the Fleet to address known capability gaps against asymmetric threats (UAS [unmanned aerial systems], small boats, and ISR sensors) and will inform future

[14] Sydney J. Freedberg Jr., "Lasers To Kill Cruise Missiles Sought By Navy, Air Force, Army," *Breaking Defense*, October 29, 2019.

acquisition strategies, system designs, integration architectures, and fielding plans for laser weapon systems."[15]

The Navy announced in January 2018 that it intended to install LWSD on *Portland*.[16] Under the Navy's FY2021 budget submission, the demonstration on *Portland* was to continue through FY2022, and the system was to be de-installed in early FY2023.[17]

Industry teams led by BAE Systems, Northrop Grumman, and Raytheon, among others, competed to develop an LWSD with a beam power of up to 150 kW. On October 22, 2015, DOD announced that it had selected Northrop Grumman as the winner of the SSL-TM competition.[18]

Figure 4 is an Office of Naval Research (ONR) graphic illustration of the SSL-TM system and its components if it were installed installed on the Navy's Self Defense Test Ship (the ex-USS *Paul F. Foster* [DD-964], an old Spruance [DD-963] class destroyer). **Figure 5** is a Navy graphic illustration of the SSL-TM system on *Portland*.

Figure 4. ONR Graphic of SSL-TM Laser System

Artist's rendering of installation on Navy's Self Defense Test Ship

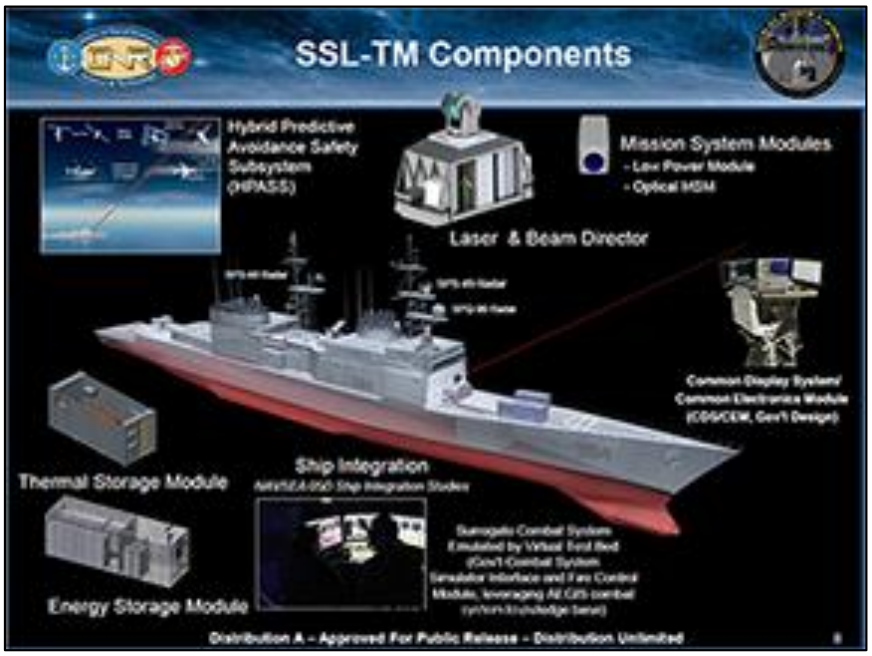

Source: Slide from February 2016 ONR briefing to CRS on SSL-TM program, received from Navy Office of Legislative Affairs February 26, 2016.

[15] *Department of Defense, Fiscal Year (FY) 2022 Budget Estimates, Navy Justification Book Volume 1 of 5, Research, Development, Test & Evaluation, Navy*, May 2021, p. 442.

[16] Megan Eckstein, "LPD Portland Will Host ONR Laser Weapon Demonstrator, Serve as RIMPAC 2018 Flagship," *USNI News*, January 10, 2018; Richard Abott, "Next Navy Amphib Will Feature Laser Weapon Demo, Chosen As Flagship For RIMPAC 2018," *Defense Daily*, January 11, 2018.

[17] *Department of Defense Fiscal Year (FY) 2021 Budget Estimates, Navy, Justification Book Volume 2 of 5, Research, Development, Test & Evaluation, Navy*, February 2020, p. 191.

[18] DOD contract award announcements for October 22, 2015. See also "US Navy Selects Northrop Grumman to Design and Produce Shipboard Laser Weapon System Demonstrator," December 22, 2015. See also Richard Scott, "Northrop Grumman To Build on MLD for SSL Demonstrator," *IHS Jane's International Defence Review*, February 2016: 5; Michael Fabey and Kris Osborn, "Navy to Fire 150Kw Ship Laser Weapon From Destroyers, Carriers," *Scout Warrior*, January 23, 2017.

Figure 5. Navy Graphic of SSL-TM Laser System

Artist's rendering of installation on USS *Portland*

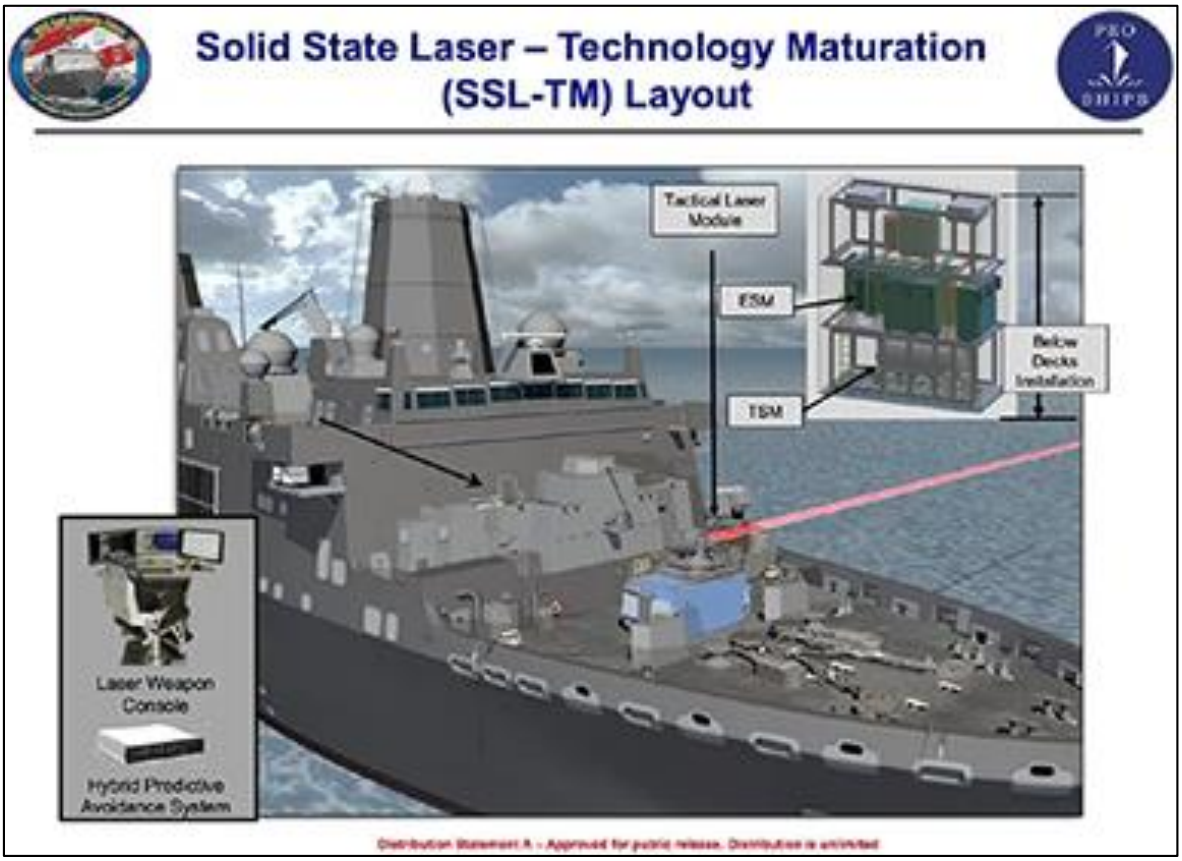

Source: Navy briefing slide accompanying Tyler Rogoway, "Mysterious Object Northrop Is Barging From Redondo Beach Is A High-Power Naval Laser," *The Drive*, October 18, 2019. The blog post credits the slide to the Navy and describes it as a "recent slide."

An October 18, 2019, blog post included photographs (**Figure 6**, **Figure 7**, and **Figure 8**) of a device the blog post identified as the SSL-TM laser being transported from Redondo Beach to San Diego for installation on *Portland*.[19]

[19] Tyler Rogoway, "Mysterious Object Northrop Is Barging From Redondo Beach Is A High-Power Naval Laser," *The Drive*, October 18, 2019.

Figure 6. Reported SSL-TM Laser Being Transported

Source: Photograph accompanying Tyler Rogoway, "Mysterious Object Northrop Is Barging From Redondo Beach Is A High-Power Naval Laser," *The Drive*, October 18, 2019. The photograph is a cropped version of a photograph printed in full elsewhere in the blog post. The uncropped version is credited to "Matt Hartman/ShoreAloneFilms.com."

Figure 7. Reported SSL-TM Laser Being Transported

Source: Photograph accompanying Tyler Rogoway, "Mysterious Object Northrop Is Barging From Redondo Beach Is A High-Power Naval Laser," *The Drive*, October 18, 2019. The photograph is credited to "KABC CH7 Screencap."

Figure 8. Reported SSL-TM Laser Being Transported

Source: Photograph accompanying Tyler Rogoway, "Mysterious Object Northrop Is Barging From Redondo Beach Is A High-Power Naval Laser," *The Drive*, October 18, 2019. The photograph is credited to "Matt Hartman/ShoreAloneFilms.com."

A March 1, 2020, press report stated

> The amphibious transport dock USS Portland (LPD 27) was fitted in the fall of 2019 with a new, 150-kilowatt weapon developed by the Office of Naval Research (ONR) and Northrop Grumman. The weapon, part of the Solid-State Laser Technology Maturation (SSL-TM) effort, is significantly more powerful than the 33 kW Laser Weapon System (LaWS) installed in 2014 aboard the now-decommissioned afloat forward staging base ship Ponce (AFSB 15).
>
> The laser aboard Portland is installed forward in the ship in a trunk structure originally intended for a never-fitted vertical launch system. The LPD was selected because the ship had the space and weight capacity along with already-installed electrical cables to ease the laser installation.
>
> The SSL-TM laser is in a trainable mounting with a clear field of fire forward and to about 65 degrees abaft each beam. No publicly available images of the weapon firing are yet known, although the system underwent testing last year on the White Sands Missile Range in New Mexico.
>
> Portland has been underway since the weapon was installed and in mid-February took part in Exercise Iron Fist at Camp Pendleton, California, but testing of the laser is expected to begin later this year. According to the Naval Sea System's (NAVSEA) Command LPD program office in late 2018, intentions are for the Portland to deploy with the weapon later in 2020 after tests are completed, but Navy officials declined to confirm to Defense and Aerospace Report whether that plan is still in place.

> The 2020 test program for the SSL-TM system aboard Portland was discussed in the Pentagon's Fiscal 2021 defense budget request sent to Congress on Feb. 10.
>
> "At-sea testing and experimentation will be conducted with full laser weapon system demonstrator" during 2020, according to the budget documents. "During this period the technical performance will be evaluated in various atmospheric and sea state conductions while conducting operational missions and exercises. Lessons learned from operations and maintenance will be documented to inform development of future laser weapons systems development efforts."
>
> It is not yet clear if the laser will become a permanent feature aboard Portland.[20]

On May 22, 2020, the Navy announced that *Portland* had used its LWSD to successfully disable a UAV in an at-sea test that was conducted on May 16, 2020.[21]

ODIN

Figure 9 and **Figure 10** reportedly show the ODIN system.

Figure 9. Reported ODIN System on USS *Stockdale*

Source: Photograph accompanying Brett Tingley, "Here's Our Best Look Yet At The Navy's New Laser Dazzler System," *The Drive*, July 13, 2021. The photograph as printed in the blog post includes the enlarged inset and the red arrow. The article credits the photograph (and a similar second photograph used for the inset) to the Navy.

The Navy's FY2022 budget submission states that

> Optical Dazzler Interdictor Navy (ODIN) development provides near-term, directed energy, shipboard Counter-Intelligence, Surveillance, and Reconnaissance (C-ISR)

[20] Christopher P. Cavas, "Lasers Sprout in San Diego," *Defense & Aerospace Report*, March 1, 2020.

[21] Commander, U.S. Pacific Fleet Public Affairs, "USS Portland Conducts Laser Weapon System Demonstrator Test," *Navy News Service*, May 22, 2020. See also Megan Eckstein, "VIDEO: USS Portland Fires Laser Weapon, Downs Drone in First At-Sea Test," *USNI News*, May 22, 2020; Paul McLeary, "US Warship Fries Drone With Powerful New Laser," *Breaking Defense*, May 22, 2020; Geoff Ziezulewicz, "Watch This Ship-mounted Navy Laser Shoot Down a Drone," *Navy Times*, May 26, 2020.

capabilities to dazzle Unmanned Aerial Systems (UASs) and other platforms that address urgent operational needs of the Fleet. FY 2018 was the first year of funding which supports the design, development, procurement and installation of ODIN standalone units over the FYDP [Future Years Defense Plan], for deployment on DDG 51 Flt IIA surface combatants. The program supports the non-recurring engineering, development, procurement of long lead material, assembly and checkout, system certification, platform integration/installation and sustainment for these ODIN standalone units.

FY 2022 funds procurement, assembly, checkout, integration, T&E [test and evaluation] and installation of Unit 6; continues procurement, assembly, checkout, integration and T&E of Units 7 and 8; and provide Operation & Sustainment (O&S) of Units 1-6.[22]

Figure 10. Reported ODIN System at Naval Support Facility Dahlgren

Source: Photograph accompanying Brett Tingley, "Here's Our Best Look Yet At The Navy's New Laser Dazzler System," *The Drive*, July 13, 2021. The caption to the photo states that it shows "OSIN being tested at Naval Support Facility Dahlgren [VA] in 2020." The article credits the photograph to the Navy.

A February 21, 2020, press report stated

> The newest weapon in the Navy's arsenal is a laser dazzler that can stymie enemy drones threatening surface ships. And now it's installed aboard an active destroyer.
>
> The system was installed aboard the Arleigh Burke-class destroyer Dewey in November, but not announced until this week, officials with Naval Sea Systems Command told Military.com.

[22] *Department of Defense, Fiscal Year (FY) 2022 Budget Estimates, Navy Justification Book Volume 2 of 5, Research, Development, Test & Evaluation, Navy*, May 2021, p. 1021.

> Called Optical Dazzling Interdictor, Navy, or ODIN, the system is the technological successor of the Laser Weapons System, or LaWS, a 30-kilowatt laser installed on the amphibious transport dock Ponce in 2014.…
>
> The capabilities and specifications of ODIN have been closely guarded; a NAVSEA official declined to share additional information about how the system will be tested or what it can do….
>
> "Going from an approved idea to installation in two and a half years, ODIN's install on Dewey will be the first operational employment of the stand-alone system that functions as a dazzler," officials said in a news release. "The system allows the Navy to rapidly deploy an important, new capability to the Navy's surface force in combating Unmanned Aircraft Systems (UAS) threats."[23]

A March 1, 2020, press report stated

> While the Navy publicized the [ODIN] laser installation aboard [the amphibious ship] Portland, a similar laser weapon was fitted in more secrecy aboard the destroyer USS Dewey (DDG 105), which appeared late last year with a different system installed during a shipyard overhaul.
>
> Little official information was available about the Dewey's system until Feb. 20, when NAVSEA issued a release describing the Dewey's Optical Dazzling Interdictor, Navy (ODIN) system as "a laser weapon system that allows a ship to counter unmanned aerial systems."
>
> According to the release, the ODIN system was approved in early 2017 based on an urgent need requirement from US Pacific Command. It was developed by Naval Surface Warfare Dahlgren, Virginia and installed after two and half years. The system, NAVSEA said, "will be the first operational employment of the stand-alone system that functions as a dazzler. The system allows the Navy to rapidly deploy an important, new capability to the Navy's surface force in combating Unmanned Aircraft Systems (UAS) threats."
>
> ODIN is the first operational deployment of a laser dazzler, a Navy official said, adding that the stand-alone system is equipped with a laser that can temporarily degrade intelligence-0gathering capabilities of unmanned aerial systems.
>
> Capt. Danny Hernandez, spokesman for the Navy's acquisition directorate, noted that the laser can "temporarily degrade intelligence-gathering capabilities of unmanned aerial systems," but he did not provide more information about the ODIN system, including its power, lethality and future plans….
>
> The NAVSEA release notes that, "within the next couple of years, the ODIN program will have all [ODIN] units operational within the fleet providing a safer and more technically advanced capability to the US Navy. Lessons learned from ODIN's installation on Dewey will inform installation on future vessels and further development and implementation of Surface Navy Laser Weapon Systems."…
>
> ODIN is not the first laser system fitted to the Dewey. A prototype LaWS system was installed on the ship's flight deck in 2012, but that system, also developed by ONR, was never intended to be permanent and was removed after tests.[24]

---

[23] Hope Hodge Seck, "The Navy Has Installed the First Drone-Stopping Laser on a Destroyer," *Military.com*, February 21, 2020. See also Justin Katz, "Navy Installs Laser on Destroyer to Counter Unmanned Intelligence Drones," *Inside Defense*, February 21, 2020.

[24] Christopher P. Cavas, "Lasers Sprout in San Diego," *Defense & Aerospace Report*, March 1, 2020. See also Kris Osborn, "New Destroyer-Fired Laser Weapons Might Stop Hypersonic Missile Attacks," *Warrior Maven*, March 1, 2020, which was republished as Kris Osborn, "Could Naval Lasers Be The Solution To China's Hypersonic Missile Threat?" *National Interest*, March 7, 2020.

A May 26, 2020, press report stated

> Earlier this year, the Navy installed the first Optical Dazzling Interdictor, Navy (ODIN) on the Arleigh Burke-class guided missile destroyer USS Dewey….
>
> ODIN took just two and a half years for the Navy to move the system from an approved idea through design, construction and testing to actual installation aboard the Dewey—a notable achievement in defense program development.
>
> "The Pacific Fleet Commander identified this urgent counter-intelligence, surveillance and reconnaissance need, and the chief of naval operations directed us to fill it as quickly as possible," said Cmdr. David Wolfe, head of the directed energy program within the Integrated Warfare Systems program executive office….
>
> Bradley Martin, a senior policy researcher at the Rand Corp., said ODIN is not going to be used like laser weapons you would see in science fiction movies, but rather as something that would scramble a unmanned aerial vehicle's optical sensor. UAVs right now aren't a threat to attack a ship, so destroying them quickly isn't necessary.
>
> "Typically, a UAV is not going to be used as a striking kind of weapon," Martin said.
>
> Instead, the laser would cause a drone to "lose its way" and eventually crash because it loses the ability to target and navigate. Any adversary using the drone to conduct surveillance of Navy activities would lose access to that asset.[25]

An April 7, 2021, press report states:

> The Navy continues to learn more about a pair of directed energy weapons, as the service installs the fourth and fifth dazzler system this year and begins land-based testing of a high-energy laser weapon, the program executive officer for integrated warfare systems told USNI News.
>
> The Navy has been in parallel working on an Optical Dazzling Interdictor, Navy (ODIN) program, a nonlethal weapon that can confuse instead of shoot down drones, which will become part of the High Energy Laser and Integrated Optical-dazzler and Surveillance (HELIOS) program that Lockheed Martin has been developing since 2018.
>
> "ODIN is unique because it's a government-designed, -built, -tested, -installed system, which I think allowed us to go fairly quickly and meet that urgent need that came from the fleet," Rear Adm. Seiko Okano told USNI News last week.
>
> ODIN is already installed on three Arleigh Burke-class guided-missile destroyers and will be installed on two more this year and three more in the coming years, for a total of eight DDGs that will help test out the system during the course of their training and operations, Okano said.
>
> She said the ODIN capability is definitely something the Navy wants for the fleet—the ability to counter intelligence, surveillance and reconnaissance activities from an adversary by using a non-lethal dazzler against pesky drones, rather than shooting them down—but ODIN's current form factor won't be the final tool fielded broadly in the fleet.
>
> Testing aboard the eight destroyers will help ensure the whole operational sequence works—from the sailor detecting an unmanned aerial vehicle to targeting it with the dazzler to successfully rendering the UAV useless. That capability, once fully tested, will then be moved over to the HELIOS program to serve as the "optical-dazzler" in the program's full name.

[25] Daniel P. Taylor, "The ODIN Shipboard Laser: Science Fiction No More," *Seapower*, May 26, 2020.

> Okano said much of the Navy's ODIN team is already collaborating with Lockheed Martin's HELIOS team to help ensure a smooth transfer of technology.[26]

SNLWS Increment 1 (HELIOS)

SNLWS Increment 1 is called HELIOS, an acronym meaning high energy laser with integrated optical dazzler and surveillance. The HELIOS effort is focused on rapid development and rapid fielding of a 60 kW-class high-energy laser (with growth potential to 150 kW) and dazzler in an integrated weapon system, for use in countering UAVs, small boats, and ISR sensors, and for combat identification and battle damage assessment. The Navy's FY2022 budget submission states that

> HELIOS provides a low cost-per-shot capability to address Anti-Surface Warfare and Counter-Intelligence, Surveillance and Reconnaissance (C-ISR) gaps with the ability to dazzle and destroy Unmanned Aerial Systems (UAS) and defeat Fast Inshore Attack Craft (FIAC) while integrated into the AEGIS Combat System on a Flt IIA Destroyer. SNLWS provides industry-developed and government integrated capability to the Fleet in as short a timeframe as possible, thereby addressing the National Defense Strategy direction to foster a culture of innovation. SNLWS includes the development of a laser weapon system in the 60 kW or higher class. Competition was utilized for system development and production efforts. SNLWS leverages mature technology that will deliver a mature laser weapon system capability to the Fleet. SNLWS development leverages the Laser Weapon System (LaWS)/Solid State Laser Quick Reaction Capability (SSL QRC) and Solid State Laser Technology Maturation (SSL TM)/Laser Weapon System Demonstrator (LWSD) efforts.
>
> The FY 2022 budget provides funding for the executing shipyard and the Alteration Installation Team (AIT) for completion of Mk 5 Mod 0 HELIOS installation and checkout in DDG 88 during AEGIS Modification (AMOD) availability; technical engineering services support during HELIOS installation and checkout, procurement of Installation and Checkout (INCO) spares required during Stages 1-7 testing during AMOD availability; procurement/completion of technical manuals; conduct of operations and maintenance, and operator training; provision of On-Board Repair Parts (OBRPs); shipping/storage of HELIOS; system repairs during INCO; development of Maintenance Requirement Cards/Maintenance Index Pages (MRCs/MIPs) and the Allowance Parts List (APL).[27]

Following a full and open competition based on a request for proposals (RFP) released on June 18, 2017, the Navy on January 26, 2018, awarded Lockheed Martin a $150 million contract for the development, manufacture, and delivery of two HELIOS systems—one for installation on a Navy Arleigh Burke (DDG-51) class Aegis destroyer, the other for land-based testing—by

[26] Megan Eckstein, "Navy Installing More Directed Energy Weapons on DDGs, Conducting Land-Based Laser Testing This Year," *USNI News*, April 7, 2021.

[27] *Department of Defense, Fiscal Year (FY) 2022 Budget Estimates, Navy Justification Book Volume 2 of 5, Research, Development, Test & Evaluation*, Navy, May 2021, p. 1010.

FY2020.[28] The contract includes options for up to 14 additional HELIOS systems that if exercised could increase the total value of the contract to $942.8 million.[29]

Figure 11 and **Figure 12** show an artist's renderings of HELIOS installed on a DDG-51.

Figure 11. HELIOS System on DDG-51 Destroyer

Artist's rendering

Source: Lockheed Martin image taken from "Lockheed Martin Receives $150 Million Contract to Deliver Integrated High Energy Laser Weapon Systems to U.S. Navy," Lockheed Martin, March 1, 2018.

[28] See DOD contract awards for January 26, 2018 (Release No: CR-017-18, January 26, 2018); "Lockheed Gets $150m Contract to Install High Energy Laser on a Flight IIA DDG-51 destroyer," *NavalToday.com*, January 29, 2018; Kimberly Underwood, "Navy Selects Lockheed Martin to Deliver Laser Energy Weapon," *Signal*, January 30, 2018; Richard Scott, "Lockheed Martin to Develop HELIOS Laser Weapon for DDG 51 Flight IIA Destroyer," *Jane's Navy International*, January 30, 2018; "Lockheed Martin Receives $150 Million Contract to Deliver Integrated High Energy Laser Weapon Systems to U.S. Navy," Lockheed Martin, March 1, 2018; Sydney J. Freedberg Jr., "First Combat Laser For Navy Warship: Lockheed HELIOS," *Breaking Defense*, March 1, 2018; Jeff Hecht, "Lockheed Martin to Develop Laser Weapons for U.S. Navy Destroyers," *IEEE Spectrum*, March 2, 2018; Justin Bachman, "The Navy Wants a Laser to Blow Drones Out of the Sky," March 2, 2018.

[29] Richard Abott, "HELIOS Laser To Be First Fully Integrated On U.S. Ship," *Defense Daily*, March 5 2018: 10-12.

Figure 12. HELIOS System on DDG-51 Destroyer

Detail from artist's rendering

Source: Detail from Lockheed Martin image taken from "Lockheed Martin Receives $150 Million Contract to Deliver Integrated High Energy Laser Weapon Systems to U.S. Navy," Lockheed Martin, March 1, 2018.

A March 21, 2019, press report states

> The Navy is planning to install the High Energy Laser and Integrated Optical-dazzler with Surveillance (HELIOS) directed energy (DE) system on a DDG-51 Flight IIA destroyer by FY 2021 as it learns how to integrate laser weapons on its ships, a top official said Wednesday [March 20].
>
> Rear Adm. Ron Boxall, director of Navy Surface Warfare, called characterized the Navy's plans to integrate directed energy weapons as "yes we are going to burn the boats if you will, and move forward with this technology."
>
> Boxall said the Navy plans to install a HELIOS system on a West Coast DDG-51 in 2021. "It's already POM'ed in there to do that,[30] hopefully a West Coast destroyer in '21, onboard. We'll be testing it and then putting it aboard the ship."
>
> The Lockheed Martin [LMT] HELIOS will consist of a 60-150 kW single laser beam that can target unmanned aircraft systems (UAS) and small boats. The HELIOS is expected to be integrated on to a destroyer for its lifetime.
>
> The weapon will also feed intelligence, surveillance and reconnaissance (ISR) data into the ship's combat system and provide a counter-UAS (C-UAS) ISR dazzler capability. The dazzler uses a lower power setting to confuse or reduce ISR capabilities of a hostile UAS.

[30] This means that the installation was already included in the Program Objective Memorandum (POM), an internal DOD document that is used to guide the preparation of the next proposed budget that DOD will submit to Congress.

> Boxall said he is confident increased DE power outputs will come, but he is not yet confident in integrating them into existing combat systems.
>
> "Because if I'm going to burn the boats, I'm going to replace something that I have on ships today doing that mission with these weapons. And if I do that, I've got to be confident that it's going to work and it's going to cover those missions."
>
> He added that if a ship has a new DE laser weapon that will both sense and kill targets, "then I have to make sure it integrates with the other things that I have on my ship that can sense and kill—namely the Aegis weapon system. And so to me the most important aspect of the integrated laser is its integration into my existing combat system, period."
>
> While Boxall is confident the Navy can continue to increase laser weapon power on ship, one major limiting factor is power margin.
>
> The first HELIOS going on a destroyer will go on a Flight IIA ship, but the Flight III as a downside that it uses almost the same hull but focuses more power generation on the new AN/SPY-6 Air and Missile Defense Radar (AMDR). The AMDR will better detect air and missile threats, but "we are out of schlitz with regard to power. We used a lot of power for that and we don't have as much" extra for additional functions.
>
> Boxall said to get a HELIOS on a DDG-51 Flight III, the Navy will have to either remove something or look at "very aggressive power management." This is part of the calculus in the successor to the DDG-51, the Large Surface Combatant (LSC)….
>
> Last year, the Navy awarded Lockheed Martin a $150 million contract to develop two HELIOS systems in early 2018, with one to integrate on a DDG-51 and one for land-based testing….
>
> However, the FY '19 defense authorization bill restricted the Navy to only one HELIOS per fiscal year without first receiving a detailed contracting and acquisition strategy report.
>
> The HELIOS will not merely be bolted on the ship, but integrated into its Aegis combat system to direct the DE weapon….
>
> More recently, in January Lockheed Martin officials said they plan to put HELIOS through a production design review in 2019….[31]

A January 13, 2020, press report stated

> The Navy will put a laser weapon on a Littoral Combat Ship for the first time this year, amid efforts to boost the LCS's lethality and to develop and field a family of laser systems.
>
> USS Little Rock (LCS-9) will receive a laser weapon during its upcoming deployment, Commander of Naval Surface Forces Vice Adm. Richard Brown told reporters. The ship will likely deploy to U.S. 4th Fleet, where sister ship USS Detroit is currently operating.
>
> USNI News understands that Little Rock would be taking on a Lockheed Martin-made 150-kilowatt high energy laser, as part of a risk reduction effort between the company, the Office of Naval Research and the Program Executive Office for Integrated Warfare Systems. The effort would contribute to a larger layered laser defense effort, a source told USNI News.

[31] Rich Abott, "Navy To 'Burn The Boats' With Laser For Destroyer In 2021, Needs Bugger LSC For Lasers," *Defense Daily*, March 21, 2019. See also Sam LaGrone, "Navy Ready to 'Burn the Boats' with 2021 Laser Installation on a Destroyer," *USNI News*, March 20, 2019; Kyle Mizokami, "The Navy Plans to Put HELIOS Laser Weapon on Destroyer by 2021," *Popular Mechanics*, March 21, 2019; Justin Katz, "HELIOS Set for Critical Design Review in 2020, Delivery in May 2021," *Inside Defense*, May 2, 2019; Marc Selinger, "US Navy Tweaks Destroyer-Based Laser Effort," *Shephard Media*, May 8, 2019.

> The laser weapon would aid the LCS in its surface warfare mission to counter fast-attack craft and unmanned aerial systems and detect incoming targets….
>
> A source told USNI News that, because Lockheed Martin makes the Freedom-variant LCS, it was able to design its 150kw laser with the right interfaces and margins in mind to make it compatible for this kind of at-sea LCS demonstration.[32]

A March 9, 2020, DOD contract award announcement stated

> Lockheed Martin Corp., Baltimore, Maryland, is awarded a $22,436,852 letter contract for the integration, demonstration, testing and operation of the Layered Laser Defense (LLD) weapon system prototype onboard a Navy littoral combat ship while that vessel is underway.… Key areas of work to be performed include development of a prototype structure and enclosure to protect the LLD from ships motion and maritime environment in a mission module format; system integration and test with government-furnished equipment; platform integration and system operational verification and test; systems engineering; test planning; data collection and analysis support; and operational demonstration. Work is expected to be complete by July 2021.[33]

On January 11, 2021, it was reported that Lockheed had delivered its production HELIOS laser to the Navy for installation on a DDG-51 Flight IIA destroyer later in 2021, and that Lockheed has found that the system is capable of providing not only self-defense (i.e., defense of the ship on which it is installed) but also some degree of area defense (i.e., defense of other ships in the area).[34] A January 15, 2021, press report stated:

> The Navy this year will be firing a high-energy laser weapon that is fully integrated with one of its destroyers, which proponents say is a major step toward fielding directed energy technology.
>
> Joe Ottaviano, Lockheed Martin business development director for advanced product solutions, said he has heard the adage that battlefield lasers always seem to be "one year away" from fielding, but asserted that this time is different.
>
> The High Energy Laser with Integrated Optical-dazzler and Surveillance, or HELIOS, this year is slated to be permanently deployed aboard a Flight IIA DDG Arleigh Burke destroyer and integrated with its Aegis combat system.
>
> "We're delivering a full-end system that actually brings defense capabilities to an area where there currently isn't any and exceeds the capability I think we all had in our mind going forward," Ottaviano said in a press briefing.
>
> HELIOS is a 60-kilowatt solid-state laser capable of scalable effects, which can "dazzle" and blind sensors, but at high power it can "put a hole" through unmanned aerial vehicles, low flying aircraft, and in some cases, missiles, Ottaviano said.
>
> Jason Wrigley, Lockheed's business development director for naval combat and missile defense systems, said: "People have been talking about the promise and the possibility of

[32] Megan Eckstein, "Littoral Combat Ship Will Field Laser Weapon as Part of Lockheed Martin, Navy Test," *USNI News*, January 13, 2020.

[33] Department of Defense, "Contracts for March 9, 2020." See also Rich Abott, "Lockheed Martin Nabs $22 Million Contract For Layered Laser Defense Prototype On LCS," *Defense Daily*, March 16, 2020.

[34] See for example, Rich Abott, "Lockheed Martin Delivers HELIOS To Navy, Boasts Additional Capability," *Defense Daily*, January 11, 2021; Jason Sherman, "Lockheed: HELIOS Laser Shows Early Potential for Area Defense; Exceeding Ship Self-Defense Objective," *Inside Defense*, January 11, 2021; Seapower Staff, "Lockheed Martin Delivers HELIOS Laser Weapon System to Navy for Testing," *Seapower*, January 11, 2021; Ed Adamczyk, "Lockheed Martin Delivers HELIOS Laser Weapon to U.S. Navy," *United Press International*, January 11, 2021.

> laser weapon systems for decades. So it's really exciting for us to finally have reached this milestone, delivering an integrated laser weapons system into the hands of sailors and as part of the Aegis weapon system."
>
> Lockheed Martin went under contract to deliver the integrated system in 2018. It spent 2020 carrying out a critical design review and factory qualification tests.[35]

An April 7, 2021, press report states that

> [Rear Adm. Seiko Okano] said HELIOS began land-based testing a few weeks ago and will be installed on destroyer USS Preble (DDG-88) in December.
>
> Unlike ODIN, which is a bolt-on capability, HELIOS is fully integrated into the ship's combat system and will be more complicated to install but also more capable due to the integration.
>
> The land-based testing is meant to ensure the integration with the combat system is holding up and to work out any kinks early on, as well as to make sure the laser itself is meeting its requirements.
>
> Once installed on Preble, there will be a lot of work to do to ensure the system is intuitive for sailors to use and is ruggedized enough to handle a maritime operating environment….
>
> Asked whether HELIOS will be the directed energy system of the future for the fleet or if it's too soon to tell, Okano said it will depend how lethal the laser beam proves to be during upcoming testing….
>
> Okano said the Navy had a lot of support from the research and development community and from all the military services who are collectively trying to work through high-power laser weapon challenges together. She said the Navy is on a natural path to get there, increasing the capability of its directed energy systems with each new product it fields for testing—but it's unclear yet if HELIOS can go the distance and provide that cruise missile defense capability for the fleet or if it will be an intermediate step on the way to that final vision.[36]

HELCAP

The Navy's FY2022 budget submission states that

> Defeating Anti-Ship Cruise Missiles (ASCMs) with a laser weapon system presents several technical challenges (e.g. high atmospheric turbulence, target acquisition and identification, target tracking, aimpoint maintenance, automatic aimpoint placement, jitter control). The High Energy Laser Counter ASCM Project (HELCAP) will assess, develop, experiment, and demonstrate the various laser weapon system technologies and methods of implementation (e.g. laser sources, mission analysis, lethality, advanced beam control with atmospheric mitigation, target and tracking sensors, control systems) required to defeat ASCMs in a crossing engagement.
>
> FY2022 funding will provide for systems engineering, mission analysis, complete integration of major components of a HELCAP prototype system, and perform beam control tracker and adaptive optics experimentation and demonstrations. Planning and

[35] Stew Magnuson, "Navy to Fully Integrate Laser into Aegis Combat System (Updated)," *National Defense*, February 15, 2021.

[36] Megan Eckstein, "Navy Installing More Directed Energy Weapons on DDGs, Conducting Land-Based Laser Testing This Year," *USNI News*, April 7, 2021.

> preparations for FY2023 system experimentation and ASCM detect to defeat demonstrations utilizing the prototype system will also continue.[37]

Remaining Development Challenges

In addition to achieving higher beam powers, developing high-energy SSLs for surface ship self-defense poses a number of other technical challenges, including those noted in the passage about HELCAP that is quoted above.

Skeptics sometimes note that proponents of high-energy military lasers over the years have made numerous predictions about when lasers might enter service with DOD, and that these predictions repeatedly have not come to pass. Viewing this record of unfulfilled predictions, skeptics have sometimes stated, half-jokingly, that "lasers are X years in the future—and always will be."

Laser proponents acknowledge the record of past unfulfilled predictions, but argue that the situation has now changed because of rapid advancements in SSL technology and a shift from earlier ambitious goals (such as developing megawatt-power lasers for countering targets at tens or hundreds of miles) to more realistic goals (such as developing kilowatt-power lasers for countering targets at no more than a few miles). Laser proponents might argue that laser skeptics are vulnerable to what might be called cold plate syndrome (i.e., a cat that sits on a hot plate will not sit on a hot plate again—but it will not sit on a cold plate, either).

Electromagnetic Railgun (EMRG) and Gun-Launched Guided Projectile (GLGP)

FY2022 Budget Proposes Suspending Further Work on EMRG and GLGP

The Navy's proposed FY2022 budget proposes suspending further work on the EMRG and GLGP programs and requests no research and development funding for them. A June 4, 2021, press report states:

> The clock seems to be running out for the Navy's much-hyped electromagnetic railgun after the service closed down development on the hypervelocity round it was meant to fire in order to make room for new programs. An overview of the White House's fiscal 2022 budget request notes that the gun-launched guided projectile, previously called the hypervelocity projectile, has been canceled, for a savings of $5.9 million.
>
> "[The Department of the Navy] terminated the Gun-Launched Guided Projectile Research and Development effort," the document states. "Potential reinvestment in the program will be reevaluated after an ongoing Strategic Capabilities Officer demonstration effort in Terminal Defense Analysis is complete."[38]

A July 2, 2021, press report states:

> The Navy has announced that it is pulling funds from the much-hyped electromagnetic railgun in order to shift those monetary resources to hypersonic missiles and other high-tech weapons….
>
> "Given fiscal constraints, combat system integration challenges and the prospective technology maturation of other weapon concepts, the Navy decided to pause research and

[37] *Department of Defense, Fiscal Year (FY) 2022 Budget Estimates, Navy Justification Book Volume 2 of 5, Research, Development, Test & Evaluation, Navy*, May 2021, p. 995.

[38] Hope Hodge Seck, "It May Be the End of the Line for the Navy's Hypervelocity Projectile," *Military.com*, June 4, 2021.

> development of the Electromagnetic Railgun [EMRG] at the end of 2021," the statement from the Navy said….
>
> The end of the railgun program was foreshadowed last month when a White House fiscal budget for 2022 revealed the Navy pulled funding for the Gun-Launched Guided Projectile—a meter-long projectile first developed exclusively as a round for the experimental railgun.
>
> "The decision to pause the EMRG program is consistent with department-wide reform initiatives to free up resources in support of other Navy priorities [and] to include improving offensive and defensive capabilities such as directed energy, hypersonic missiles and electronic warfare systems," the Navy's statement said.[39]

EMRG

The Navy had been developing EMRG since 2005. EMRG is cannon that uses electricity rather than chemical propellants (i.e., gunpowder charges) to fire a projectile.[40] In EMRG, "magnetic fields created by high electrical currents accelerate a sliding metal conductor, or armature, between two rails to launch projectiles at [speeds of] 4,500 mph to 5,600 mph,"[41] or roughly Mach 5.9 to Mach 7.4 at sea level.[42] Like SSLs, EMRG draws its power from the ship's overall electrical supply.[43]

The Navy originally began developing EMRG as a naval surface fire support (NSFS) weapon for supporting U.S. Marines operating ashore, but subsequently determined that the weapon also had potential for defending against missiles, which for a time strengthened Navy interest in EMRG development.[44]

Following tests with early Navy-built EMRG prototypes, the Navy funded the development of two industry-built EMRG prototype demonstrators, one by BAE Systems and the other by General Atomics (see **Figure 13** and **Figure 14**). The two industry-built prototypes were designed to fire projectiles at energy levels of 20 to 32 megajoules,[45] which is enough to propel a projectile

[39] Konstantin Toropin, "The Navy Finally Pulls the Plug on the Railgun," *Military.com*, July 2, 2021. See also Joseph Trevithick, "The Navy's Railgun Looks Like It's Finally Facing The Axe In New Budget Request," *The Drive*, June 1, 2021; Kyle Mizokami, "The Navy's Railgun Is Finally Dead," *Popular Mechanics*, June 15, 2021.

[40] Because it uses electricity rather than a powder charge to accelerate the projectile, Navy officials sometimes refer to EMRG as a launcher rather than a gun or cannon.

[41] Grace Jean, "With a Bang, Navy Begins Tests on EM Railgun Prototype Launcher," *Navy News Service*, February 28, 2012.

[42] The speed of sound in air (i.e., Mach 1), varies with altitude; at sea level, it is approximately 761 miles an hour.

[43] Unlike SSLs, however, EMRG is not a directed energy weapon, because it achieves its effects by firing a physical projectile at the target, not by directing electromagnetic energy at the target.

[44] For an article discussing the use of EMRG in countering ASCMs and ASBMs, see Sam LaGrone, "Navy Wants Rail Guns to Fight Ballistic and Supersonic Missiles Says RFI," *USNI News*, January 5, 2015. In response to Section 243 of the FY2012 National Defense Authorization Act (H.R. 1540/P.L. 112-81 of December 31, 2011), the Navy in September 2012 submitted to the congressional defense committees a report on the EMRG development effort. (U.S. Navy, *Electromagnetic Railgun System: Final Report to the Congressional Defense Committees*, August 2012, with cover letters dated September 18, 2012. For a press report discussing the Navy's report to Congress, see Dan Taylor, "Stackley: Navy Identifies Four Technical Hurdles To Railgun Development," *Inside the Navy*, November 19, 2012.)

[45] The Navy states that "a megajoule is a measurement of energy associated with a mass traveling at a certain velocity. In simple terms, a one-ton vehicle moving at 100 mph equals a magajoule of energy." (Office of Naval Research Public Affairs, "Navy Sets New World Record with Electromagnetic Railgun Demonstration," *Navy News Service*, December 10, 2010.

50 to 100 nautical miles.[46] (Such ranges might refer to using the EMRG for NSFS missions. Intercepts of missiles and UAVs might take place at much shorter ranges.) The Navy began evaluating the two industry-built prototypes in 2012.

Figure 13. Industry-Built EMRG Prototype Demonstrator

BAE prototype

Source: Navy photograph dated July 8, 2014, associated with Office of Naval Research Public Affairs, "From Research to Railgun: Revolutionary Weapon at Future Force EXPO," *Navy News Service*, January 13, 2015.

[46] Grace Jean, "With a Bang, Navy Begins Tests on EM Railgun Prototype Launcher," *Navy News Service*, February 28, 2012.

Figure 14. Industry-Built EMRG Prototype Demonstrator

General Atomics prototype

Source: Navy photograph dated July 8, 2014.

GLGP

As the Navy was developing EMRG, it realized that the guided projectile being developed for EMRG, which weighs about 28 pounds,[47] could also be fired from 5-inch and 155 mm powder guns. When fired from EMRG, the projectile reaches hypervelocity (i.e., Mach 5+) speeds, and thus came to be known as the hypervelocity projectile (HVP).

[47] Source: BAE Systems datasheet, "HVP Hypervelocity Projectile," March 2015, 2 pp. The datasheet states that BAE's HVP integrated launch package is 26 inches long and weighs 40 pounds, and that the HVP flight body contained in the integrated launch package is 24 inches long and weighs 28 pounds, including a 15-pound payload.

The Navy stated in 2014 that HVP weighs 23 pounds; see David Martin, "Navy's Newest Weapon Kills at Seven Times the Speed of Sound," *CBS News (cbsnews.com)*, April 7, 2014.

BAE Systems states that HVP is 24 inches long and weighs 28 pounds, including a 15-pound payload. The total length and weight of an HVP launch package, BAE Systems states, is 26 inches and 40 pounds. BAE states that the maximum rate of fire for HVP is 20 rounds per minute from a Mk 45 5-inch gun, 10 rounds per minute from the 155 mm gun on DDG-1000 class destroyers (called the Advanced Gun System, or AGS), and 6 rounds per minute from EMRG. HVP's firing range, BAE Systems states, is more than 40 nautical miles (when fired from a Mk 45 Mod 2 5-inch gun), more than 50 nautical miles (Mk 45 Mod 4 5-inch gun), more than 70 nautical miles (155 mm gun on DDG-1000 class destroyers), and more than 100 nautical miles (EMRG). (BAE Systems, "Hypervelocity Projectile (HVP)," 2014.)

In July 2015, the Navy issued a request for information (RFI) to industry for the fabrication of a prototype EMRG mount capable of handling an integrated launch weight package of 22 kg, or about 48.5 pounds. (RFI for Fabrication of Prototype Mount for Naval Railgun, Solicitation Number: N00024-15-R-4132, FedBizOpps.gov, July 29, 2015. See also Justin Doubleday, "Navy Developing Integrated Mount For Electromagnetic Railgun," *Inside the Navy*, July 31, 2015.)

When fired from a power gun, the projectile flies quickly, but not as quickly as it does when fired from EMRG. In addition, whereas the Navy's original concept was to use the EMRG projectile for both EMRG and powder guns, the Navy later stated that the high-speed projectile fired from powder guns might instead be a different projectile. For both of these reasons, the high-speed projectile for powder guns, which was originally called HVP, was referred to by the Navy as the gun-launched guided projectile (GLGP).[48]

As noted earlier, GLGP had an estimated unit procurement cost in 2018 of about $85,000.[49]

One potential advantage of GLGP is that the 5-inch and 155 mm guns from which it would be fired are already installed on Navy cruisers and destroyers, creating a potential for rapidly proliferating GLGP through the cruiser-destroyer force, once development of GLGP is complete and the weapon has been integrated into cruiser and destroyer combat systems. Navy cruisers each have two 5-inch guns, and Navy Arleigh Burke (DDG-51) class destroyers each have one 5-inch gun.

Figure 15 and **Figure 16** show the then-named HVP. **Figure 17** shows launch packages for the then-named HVP configured for 5-inch guns, 155 mm guns, and EMRG.

[48] The Navy states that

> The terms HVP and GLGP are both still used. Hyper Velocity Projectile (HVP) is the term used in the current development programs that [DOD's] SCO [Strategic Capabilities Office] and [Office of naval Research] ONR have ongoing with BAE Systems. Gun Launch Guided Projectile (GLGP) is the term that describes the future acquisition program and the associated performance specification that industry will compete for. GLGP is the RDT&E [research, development, test, and evaluation] budget program element [i.e., line item] covering all guided projectile development effort including HVP.
>
> (Navy Office of Legislative Affairs email to CRS, May 6, 2019.)

[49] Sydney J. Freedberg Jr., "$86,000 + 5,600 MPH = Hyper Velocity Missile Defense," *Breaking Defense*, January 26, 2018; Jared Keller, "The U.S. Military Has a New 'Bullet' That Attacks At Mach Six (with 100 Mile Range)," *National Interest*, February 3, 2018.

Figure 15. Photograph Showing HVP

Source: Navy photograph dated April 4, 2014, with a caption that reads in part: "Rear Adm. Matthew Klunder, chief of naval research, shows off a Hypervelocity Projectile (HVP) to CBS News reporter David Martin during an interview held at the Naval Research Laboratory's materials testing facility."

In September 2012, when the concept was to use the then-named HVP as a common projectile for both EMRG and powder guns (which might still happen), the Navy described the projectile as

> a next generation, common, low drag, guided projectile capable of completing multiple missions for gun systems such as the Navy 5-Inch, 155-mm, and future railguns. Types of missions performed will depend on gun system and platform. The program goal is to address mission requirements in the areas of Naval Surface Fire Support, Cruise Missile Defense, Anti-Surface Warfare, and other future Naval mission areas. Mission performance will vary from gun system, launcher, or ship. HVP's low drag aerodynamic design enables high velocity, maneuverability, and decreased time-to-target. These attributes coupled with accurate guidance electronics provide low cost mission effectiveness against current threats and the ability to adapt to air and surface threats of the future.
>
> The high velocity compact design relieves the need for a rocket motor to extend gun range. Firing smaller more accurate rounds improves danger close/collateral damage requirements and provides potential for deeper magazines and improved shipboard safety. Responsive wide area coverage can be achieved using HVP from conventional gun systems and future railgun systems.
>
> The modular design will allow HVP to be configured for multiple gun systems and to address different missions. The hypervelocity projectile is being designed to provide lethality and performance enhancements to current and future gun systems. A hypervelocity projectile for multiple systems will allow for future technology growth while reducing development, production, and total ownership costs.

Research Challenges & Opportunities [include]

—High acceleration tolerant electronic components

—Lightweight, high strength structural composites

—Miniature, high density electronic components

—Safe high energy propellants compatible with shipboard operations

—Aerothermal protection systems for flight vehicles[50]

Figure 16. HVP

Source: Slide 7 from Navy briefing entitled "Electromagnetic Railgun," NDIA Joint Armaments Forum, Exhibition & Technology Demonstration, May 14, 2014, LCDR Jason Fox, USN, Assistant PM [Program Manager], Railgun Ship Integration, Distribution A, Approved for Public Release.

When fired from 5-inch powder guns, GLGP reportedly achieves a speed of roughly Mach 3, which is roughly half the speed it achieves when fired from EMRG, but more than twice the speed of a conventional 5-inch shell fired from a 5-inch gun.[51] This is apparently fast enough for countering at least some ASCMs. The Navy states that "The HVP—combined with the MK 45 [5-

[50] Office of Naval Research, "Hypervelocity Projectile," September 2012.

[51] Source: Sam LaGrone, "Updated: Navy Researching Firing Mach 3 Guided Round from Standard Deck Guns," *USNI News*, June 1, 2015 (updated June 2, 2015). A September 10, 2020, press report cited a speed of Mach 5 for an HVP fired from an Army 155 mm howitzer—see Kyle Mizokami, "The Army's Big, Dumb Guns Aren't Dumb Anymore (and Now They Can Shoot Down Planes)," *Popular Mechanics*, September 10, 2020.

inch gun][52]—will support various mission areas including naval surface fire support, and has the capacity to expand to a variety of anti-air threats, [and] anti-surface [missions], and could expand the Navy's engagement options against current and emerging threats."[53]

Figure 17. HVP Launch Packages

Launch packages for 5-inch gun, 155 mm gun, and EMRG

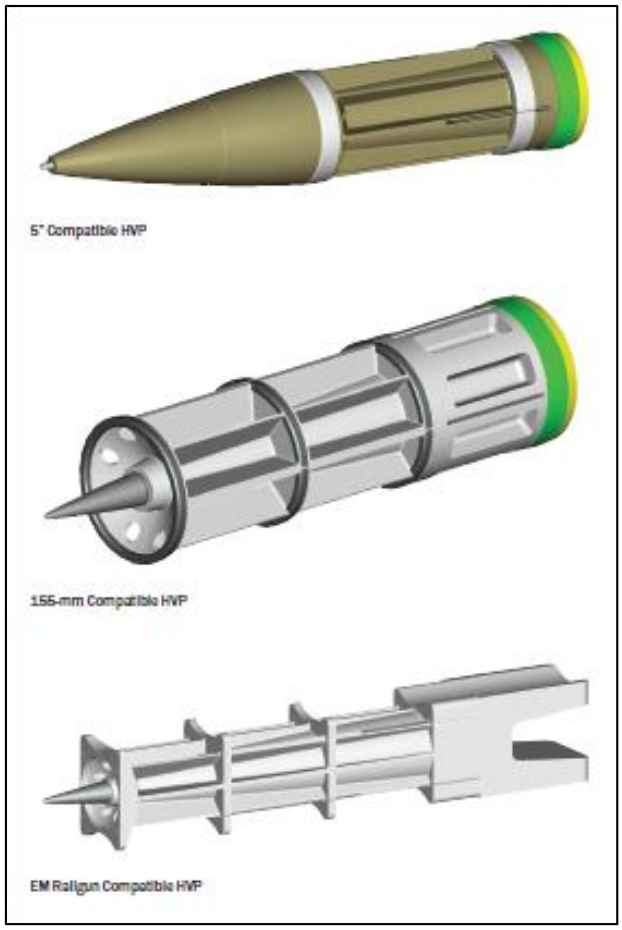

Source: BAE Systems, "Hypervelocity Projectile (HVP)," 2014.

A December 21, 2016, opinion column states the following:

> Now the Navy is acquiring rail guns that use such energy to fire 15- to 25-pound, 18-inch projectiles at 5,000 miles per hour. They hit with the impact of a train slamming into a wall at 100 miles per hour. The high-speed, hence high-energy projectiles, which cost just $25,000, can radically improve fleet-protection capabilities: A barrage of them could counter an enemy's more expensive anti-ship missiles.
>
> The daunting challenge posed by defense against the proliferating threat of ballistic missiles is that it is prohibitively expensive to be prepared to intercept a swarm of incoming missiles. New technologies, however, can revolutionize defense against ballistic missiles

[52] The type of 5-inch gun on Navy cruisers and destroyers is called the Mark 45.

[53] Naval Surface Warfare Center Dahlgren Division Corporate Communications, "DEPSECDEF Loads HVP on Test Range, Observes Repetitive Rate Electromagnetic Railgun's Commissioning Series," *Navy News Service*, May 8, 2015.

> because small, smart projectiles can be inexpensive. It takes 300 seconds to pick up such a launched missile's signature, the missile must be tracked and a vector calculated for defensive projectiles. A single 25-pound projectile can dispense more than 500 three-gram tungsten impactors and be fired at hypervelocity by electromagnetic energy. Their impact force—their mass times the square of their velocity—can destroy expensive missiles and multiple warheads.[54]

Figure 18 is a slide showing the potential application of the then-named HVP to 5-inch power guns, 155 mm powder guns, and EMRG.

Figure 18. HVP Application to Various Launchers

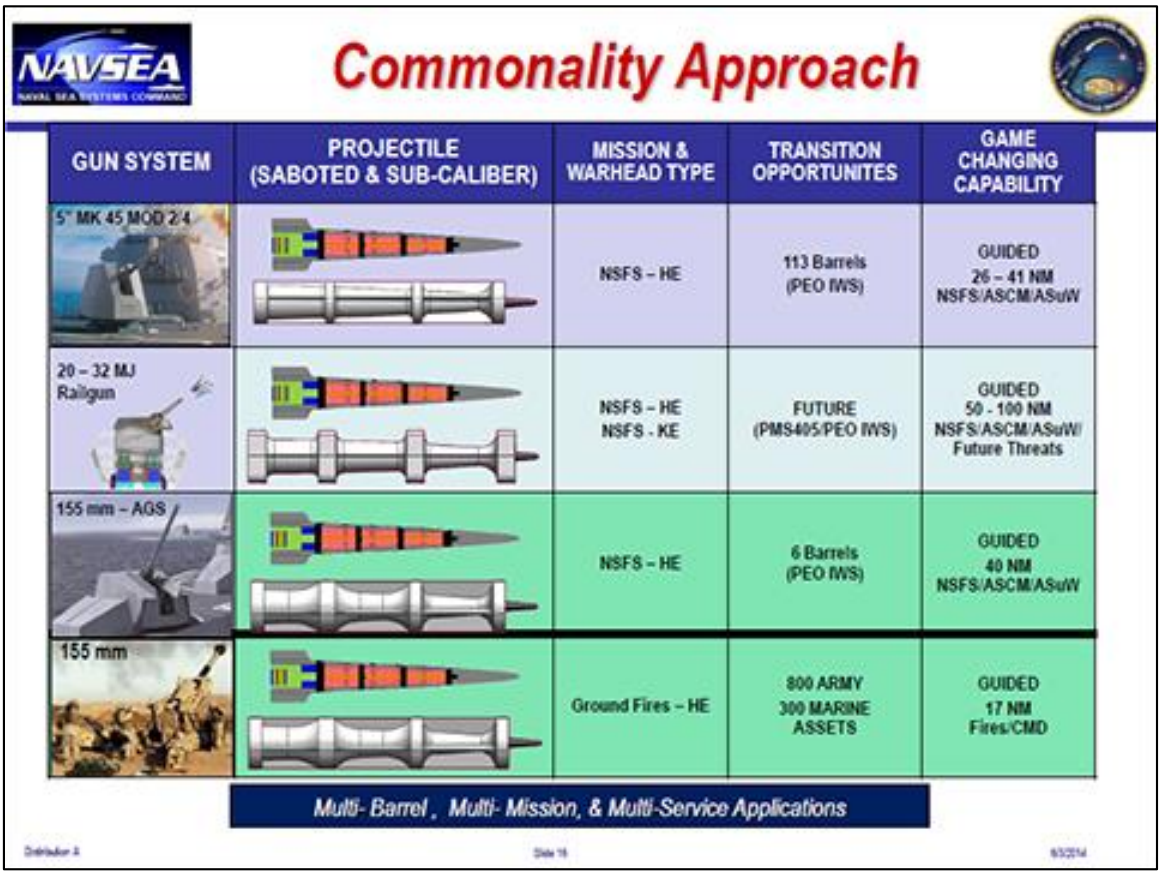

Source: Slide 16 from Navy briefing entitled "Electromagnetic Railgun," NDIA Joint Armaments Forum, Exhibition & Technology Demonstration, May 14, 2014, LCDR Jason Fox, USN, Assistant PM [Program Manager], Railgun Ship Integration, Distribution A, Approved for Public Release.

The first line of the slide in **Figure 18**, for example, discusses then-named HVP's use with 5-inch powder guns, stating that it uses a high-explosive (HE) warhead for the NSFS mission;[55] that a total of 113 5-inch gun barrels are available in the fleet (which could be a reference to 22 cruisers with two guns each, and 69 destroyers with one gun each); and that as a game-changing capability, it is guided and can be used at ranges of up to 26 nautical miles to 41 nautical miles for

[54] George F. Will, "Can Mattis Make Peace Through Technology?" *Washington Post*, December 21, 2016.

[55] The "KE" in the next line down means that when fired from EMRG, the projectile can alternatively attack targets using its own kinetic energy (i.e., by impacting the target at hypersonic speed).

NSFS operations, for countering ASCMs, and for anti-surface warfare (ASuW) operations (i.e., attacking surface ships and craft).

Figure 19 is a not-to-scale illustration of how then-named HVPs fired from EMRGs and 5-inch guns could be used to counter various targets, including ASCMs and ASBMs.

Figure 19. Navy Slide Depicting HVP Operations Against Various Target Types

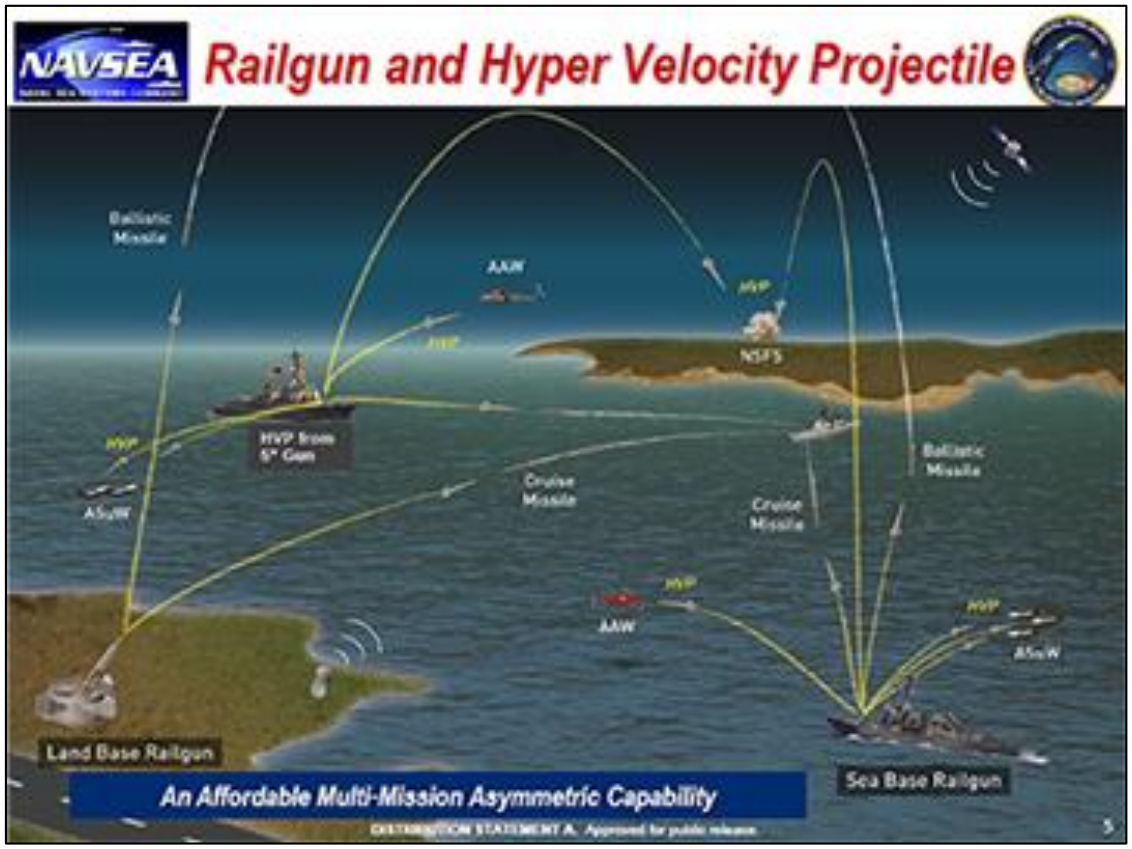

Source: Slide 5 from Navy briefing entitled "Electromagnetic Railgun," NDIA Joint Armaments Forum, Exhibition & Technology Demonstration, May 14, 2014, LCDR Jason Fox, USN, Assistant PM [Program Manager], Railgun Ship Integration, Distribution A, Approved for Public Release.

GLGP emerged in 2016 as a program of particular interest to DOD, which explored the potential for using the weapon across multiple U.S. military services.[56] On September 3, 2020, at the White Sands Missile Range in New Mexico, an HVP fired from a 155 mm gun reportedly successfully

[56] See Jason Sherman, "SCO Aims To Flip The Script on Missile Defense With Hypervelocity Gun," *Inside the Navy*, April 11, 2016; Scott Maucione, "DoD Is Setting Up the Third Offset for the Next President," *Federal News Radio*, May 2, 2016; Aaron Mehta, "Pentagon No. 2: How to Keep Third Offset Going in the Next Administration," *Defense News*, May 5, 2016; Tony Bertuca, "Work: New Hypervelocity Gun Could Displace Rail Gun in Next Administration," *Inside the Navy*, May 9, 2016; Sam LaGrone, "Pentagon: New Rounds For Old Guns Could Change Missile Defense for Navy, Army," *USNI News*, July 16 (updated July 19), 2016; Tony Bertuca, "DOD's New Hypervelocity Gun Technology Emerging As Key BMD Capability," *Inside the Navy*, September 19, 2016; Kris Osborn, "Pentagon to Accelerate Rail Gun Hypervelocity Projectile—Fires From Army Howitzer," *Scout Warrior*, May 19, 2017; Sydney J. Freedberg Jr., "$86,000 + 5,600 MPH = Hyper Velocity Missile Defense," *Breaking Defense*, January 26, 2018; Yasmin, "Secretive Pentagon Office Share Details About Hypervelocity Missile Defense Weapon (Updated)," *National Defense*, January 26, 2018; Sam LaGrone, "Navy Quietly Fires 20 Hyper Velocity Projectiles Through Destroyer's Deckgun," *USNI News*, January 8, 2019.

intercepted a cruise missile target. It was reportedly the first time that an HVP had intercepted such a target. The 155 mm gun was mounted on an Army self-propelled howitzer that was participating in a field test of the Air Force's Advanced Battle Management System (ABMS).[57]

Remaining Development Challenges

Remaining development challenges for EMRG involved items relating to the gun itself (including increasing barrel life to desired levels), the projectile, the weapon's electrical power system, and the weapon's integration with the ship. Fielding GLGP on cruisers and destroyers equipped with 5-inch and 155 mm powder guns would additionally require GLGP to be integrated with the combat systems of those ships.

Issues for Congress

Issues for Congress regarding SSLs, EMRG, and GLGP include the following:

- whether the Navy is moving too quickly, too slowly, or at about the right speed in its efforts to develop these weapons;
- more specifically, whether work on EMRG and GLGP programs should be suspended as the Navy is proposing in its FY2022 budget submission;
- the Navy's plans for transitioning SSLs from development to procurement and fielding of production models aboard Navy ships; and
- whether Navy the Navy's shipbuilding plans include ships with appropriate amounts of space, weight, electrical power, and cooling capacity to accommodate SSLs.

Potential oversight questions for Congress include the following:

- Using currently available air-defense weapons, how well could Navy surface ships defend themselves in a combat scenario against an adversary such as China that has or could have large numbers of UAVs and anti-ship missiles? How would this situation change if Navy surface ships in coming years were equipped with SSLs, EMRG, GLGP, or some combination of these systems? How cost effective would SSLs, EMRG, and GLGP be as surface ship self-defense weapons compared to other Navy surface ship self-defense measures?
- How significant are the remaining development challenges for SSLs, EMRG, and GLGP?
- When does the Navy anticipate issuing a roadmap detailing its plans for procuring and installing production versions of SSLs on specific Navy ships by specific dates?

[57] Theresa Hitchens, "ABMS Demo Proves AI Chops For C2," *Breaking Defense*, September 31, 2020; Kyle Mizokami, "The Army's Big, Dumb Guns Aren't Dumb Anymore (and Now They Can Shoot Down Planes)," *Popular Mechanics*, September 10, 2020; Brian W. Everstine, "'Smart' Bullet Downs Cruise Missile in 2nd ABMS Test," *Air Force Magazine*, September 4 (updated September 5), 2020; Charles Pope, "Advanced Battle Management System Field Test Brings Joint Force Together Across All Domains During Second Onramp," U.S. Air Force, September 3, 2020; Christian McCurdy, "Air Force destroys surrogate cruise missile in hypervelocity projectile test," *United Press International*, September 3, 2020; Masao Dahlgren, "Air Force Intercepts Missile with Hypervelocity Projectile," Missile Threat (Center for Strategic and International Studies [CSIS]), September 3, 2020. See also Thomas Newdick and Tyler Rogoway, "Testing Points To Relevance Of Hyper Velocity Projectile For Zumwalt Destroyer's Dormant Guns," *The Drive*, September 17, 2020.

- Will the kinds of surface ships that the Navy plans to procure in coming years have sufficient space, weight, electrical power, and cooling capability to take full advantage of SSLs? What changes, if any, would need to be made in Navy plans for procuring large surface combatants (i.e., destroyers and cruisers) or other Navy ships to take full advantage of SSLs?
- If development work were to continue on EMRG and/or GLGP, what would the next phase of work entail, and how much funding would be required for it in FY2022?

Legislative Activity for FY2022

Summary of Congressional Action on FY2022 Funding

Table 1 summarizes congressional action on selected Navy FY2022 research and development account line items (known as program elements, or PEs) related to SSLs, EMRG, and GLGP. These PEs do not necessarily capture all Navy research and development work related to these efforts—additional funding for these efforts may occur in other PEs that do not explicitly indicate that they include funding for these efforts.

The Navy's proposed FY2022 budget requests research and development funding for continued work on SSLs, but proposes suspending further work on the EMRG and GLGP programs and requests no research and development funding for them.

Table 1. Summary of Congressional Action on FY2022 Funding

In millions of dollars, rounded to nearest tenth

		Authorization			Appropriation		
Program Element (PE) number, PE name, budget line number	**Req.**	**HASC**	**SASC**	**Conf.**	**HAC**	**SAC**	**Conf.**
SSL-TM							
PE 0603382N, Advanced Combat Systems Technology (Line 35), Project 2480, SSL-TM	5.3				5.3		
ODIN							
PE 0603925N, Directed Energy and Electric Weapon System (Line 75), Project 9823, Lasers for Navy application, ODIN	9.5				9.5		
SNLWS Increment 1 (HELIOS)							
PE 0603925N, Directed Energy and Electric Weapon System (Line 75), Project 3402, Surface Navy Laser Weapon System (SNLWS)	46.3				40.6		
HELCAP							
PE 0603925N, Directed Energy and Electric Weapon System (Line 75), Project 2731, High Energy Laser Counter ASCM Project (HELCAP)	26.0				26.0		
PE 0603801N, Innovative Naval Prototypes (INP) Advanced Technology Development (Line 26), Project 2731, High Energy Laser Counter ASCM Project (HELCAP)	14.0				14.0		
EMRG							
PE 0603801N, Innovative Naval Prototypes (INP) Advanced Technology Development (Line 26), Project 2481, EMRG	0.0				0.0		
GLGP (HVP)							
PE 0603795N, Land Attack Technology (Line 72), Project 3401, Guided Projectile	0.0				0.0		

Source: Table prepared by CRS based on Navy FY2022 budget submission, committee and conference reports, and explanatory statements on FY2022 National Defense Authorization Act and FY2022 DOD Appropriations Act.

Notes: HASC is House Armed Services Committee; **SASC** is Senate Armed Services Committee; **HAC** is House Appropriations Committee; **SAC** is Senate Appropriations Committee; **Conf.** is conference agreement. These PEs do not necessarily capture all Navy research and development work related to shipboard lasers, EMRG, and GLGP; additional funding for these efforts may occur in other PEs whose names and project titles do not explicitly indicate that they are for these efforts.

FY2022 DOD Appropriations Act (H.R. 4432)

House

The House Appropriations Committee, in its report (H.Rept. 117-88 of July 15, 2021) on H.R. 4432, recommended the funding levels shown in the HAC column of **Table 1**.

The recommended reduction of $5.75 million for project 3402 in line 75 is for "SNLWS prime contractor efforts unjustified request." (Page 267)

H.Rept. 117-88 states:

> ELECTROMAGNETIC RAILGUN PROGRAM
>
> The Committee notes that the fiscal year 2022 budget request does not include funding for the electromagnetic railgun program after the Navy has invested in the program for several years. The Committee recognizes that the development of a functional railgun has the potential to provide the Navy with a safe, effective, and significantly less expensive offensive capability than traditional legacy weapons systems. The Committee directs the Secretary of the Navy to submit a report to the congressional defense committees not later than 90 days after the enactment of this Act that details the status of the electromagnetic railgun program. The report shall include, but not be limited to, the status of the development and testing of the program, the amount of funding invested to date, the funding level necessary to achieve a fully functional system in the future, and the plan to incorporate this program onto Navy ships. (Pages 276-277)

Appendix. Potential Advantages and Limitations of Shipboard Lasers

This appendix presents additional information on potential advantages and limitations of shipboard lasers.

Potential Advantages

In addition to a low marginal cost per shot and deep magazine, potential advantages of shipboard lasers include the following:

- **Fast engagement times.** Light from a laser beam can reach a target almost instantly (eliminating the need to calculate an intercept course, as there is with interceptor missiles) and, by remaining focused on a particular spot on the target, cause disabling damage to the target within seconds. After disabling one target, a laser can be redirected in several seconds to another target.
- **Ability to counter radically maneuvering missiles.** Lasers can follow and maintain their beam on radically maneuvering missiles that might stress the maneuvering capabilities of Navy SAMs.
- **Precision engagements.** Lasers are precision-engagement weapons—the light spot from a laser, which might be several inches in diameter, affects what it hits, while generally not affecting (at least not directly) separate nearby objects.
- **Graduated responses.** Lasers can perform functions other than destroying targets, including detecting and monitoring targets and producing nonlethal effects, including reversible jamming of electro-optic (EO) sensors. Lasers offer the potential for graduated responses that range from warning targets to reversibly jamming their systems, to causing limited but not disabling damage (as a further warning), and then finally causing disabling damage.

Potential Limitations

Potential limitations of shipboard lasers include the following:

- **Line of sight.** Since laser light tends to fly through the atmosphere on an essentially straight path, shipboard lasers would be limited to line-of-sight engagements, and consequently could not counter over-the-horizon targets or targets that are obscured by intervening objects. This limits in particular potential engagement ranges against small boats, which can be obscured by higher waves, or low-flying targets. Even so, lasers can rapidly reacquire boats obscured by periodic swells.
- **Atmospheric absorption, scattering, and turbulence.** Substances in the atmosphere—particularly water vapor, but also things such as sand, dust, salt particles, smoke, and other air pollution—absorb and scatter light from a shipboard laser, and atmospheric turbulence can defocus a laser beam. These effects can reduce the effective range of a laser. Absorption by water vapor is a particular consideration for shipboard lasers because marine environments feature substantial amounts of water vapor in the air. There are certain wavelengths of light (i.e., "sweet spots" in the electromagnetic spectrum) where atmospheric absorption by water vapor is markedly reduced. Lasers can be

designed to emit light at or near those sweet spots, so as to maximize their potential effectiveness. Absorption generally grows with distance to target, making it in general less of a potential problem for short-range operations than for longer-range operations. Adaptive optics, which make rapid, fine adjustments to a laser beam on a continuous basis in response to observed turbulence, can counteract the effects of atmospheric turbulence. Even so, lasers might not work well, or at all, in rain or fog, preventing lasers from being an all-weather solution.

- **Thermal blooming.** A laser that continues firing in the same exact direction for a certain amount of time can heat up the air it is passing through, which in turn can defocus the laser beam, reducing its ability to disable the intended target. This effect, called thermal blooming, can make lasers less effective for countering targets that are coming straight at the ship, on a constant bearing (i.e., "down-the-throat" shots). Other surface ship self-defense systems, such as interceptor missiles or a CIWS, might be more suitable for countering such targets. Most tests of laser systems have been against crossing targets rather than "down-the-throat" shots. In general, thermal blooming becomes more of a concern as the power of the laser beam increases.
- **Saturation attacks.** Since a laser can attack only one target at a time, requires several seconds to disable it, and several more seconds to be redirected to the next target, a laser can disable only so many targets within a given period of time. This places an upper limit on the ability of an individual laser to deal with saturation attacks—attacks by multiple weapons that approach the ship simultaneously or within a few seconds of one another. This limitation can be mitigated by installing more than one laser on the ship, similar to how the Navy installs multiple CIWS systems on certain ships.
- **Hardened targets and countermeasures.** Less-powerful lasers—that is, lasers with beam powers measured in kilowatts (kW) rather than megawatts (MW)—can have less effectiveness against targets that incorporate shielding, ablative material, or highly reflective surfaces, or that rotate rapidly (so that the laser spot does not remain continuously on a single location on the target's surface) or tumble. Small boats (or other units) could employ smoke or other obscurants to reduce their susceptibility to laser attack.[58] Measures such as these, however, can increase the cost and/or weight of a weapon, and obscurants could make it more difficult for small boat operators to see what is around them, reducing their ability to use their boats effectively.

[58] See, for example, "Kelsey D. Atherton, "China Plans To Defeat American Lasers With Smoke," *Popular Science*, May 3, 2016.

- **Risk of collateral damage to aircraft, satellites, and human eyesight.** Since light from an upward-pointing laser that does not hit the target would continue flying upward in a straight line, it could pose a risk of causing unwanted collateral damage to aircraft and satellites. The light emitted by SSLs being developed by the Navy is of a frequency that can cause permanent damage to human eyesight, including blinding. Blinding can occur at ranges much greater than ranges for damaging targeted objects. Scattering of laser light off the target or off fog or particulates in the air can pose a risk to exposed eyes.[59]

For additional background information on potential Navy shipboard SSLs, see CRS Report R41526, *Navy Shipboard Lasers for Surface, Air, and Missile Defense: Background and Issues for Congress*, by Ronald O'Rourke.

Author Information

Ronald O'Rourke
Specialist in Naval Affairs

Disclaimer

This document was prepared by the Congressional Research Service (CRS). CRS serves as nonpartisan shared staff to congressional committees and Members of Congress. It operates solely at the behest of and under the direction of Congress. Information in a CRS Report should not be relied upon for purposes other than public understanding of information that has been provided by CRS to Members of Congress in connection with CRS's institutional role. CRS Reports, as a work of the United States Government, are not subject to copyright protection in the United States. Any CRS Report may be reproduced and distributed in its entirety without permission from CRS. However, as a CRS Report may include copyrighted images or material from a third party, you may need to obtain the permission of the copyright holder if you wish to copy or otherwise use copyrighted material.

[59] The United States in 1995 ratified the 1980 Convention on Prohibitions or Restriction on the Use of Certain Conventional Weapons Which May be Deemed to be Excessively Injurious or to Have Indiscriminate Effects. An international review of the convention began in 1994 and concluded in May 1996 with the adoption of, among other things, a new Protocol IV on blinding laser weapons. The protocol prohibits the employment of lasers that are specifically designed to cause permanent blindness to the naked eye or to the eye with corrective eyesight devices. The United States ratified Protocol IV on December 23, 2008, and it entered into force for the United States on July 21, 2009. DOD views the protocol as fully consistent with DOD policy. DOD believes the lasers discussed in this report are consistent with DOD policy of prohibiting the use of lasers specifically designed to cause permanent blindness to the naked eye or to the eye with corrective eyesight devices. For further discussion, see Appendix I ("Protocol on Blinding Lasers") in CRS Report R41526, *Navy Shipboard Lasers for Surface, Air, and Missile Defense: Background and Issues for Congress*, by Ronald O'Rourke.