Congressional Research Service
Informing the legislative debate since 1914

Navy Lasers, Railgun, and Gun-Launched Guided Projectile: Background and Issues for Congress

Updated July 28, 2020

Congressional Research Service
https://crsreports.congress.gov
R44175

CRS REPORT
Prepared for Members and
Committees of Congress

Summary

Three new ship-based weapons being developed by the Navy—solid state lasers (SSLs), the electromagnetic railgun (EMRG), and the gun-launched guided projectile (GLGP), also known as the hypervelocity projectile (HVP)—could substantially improve the ability of Navy surface ships to defend themselves against surface craft, unmanned aerial vehicles (UAVs), and eventually anti-ship cruise missiles (ASCMs).

The Navy has been developing SSLs for several years, and in 2014 installed on a Navy ship its first prototype SSL capable of countering surface craft and UAVs. The Navy since then has been developing and installing additional SSL prototypes with improved capability for countering surface craft and UAVs. Higher-power SSLs being developed by the Navy are to have a capability for countering ASCMs. Current Navy efforts to develop SSLs include

- the Solid State Laser Technology Maturation (SSL-TM) effort;
- the Optical Dazzling Interdictor, Navy (ODIN);
- the Surface Navy Laser Weapon System (SNLWS) Increment 1, also known as the high-energy laser with integrated optical dazzler and surveillance (HELIOS); and
- the High Energy Laser Counter-ASCM Program (HELCAP).

The first three efforts above are included in what the Navy calls the Navy Laser Family of Systems (NFLoS) effort. NFLOS and HELCAP, along with technologies developed by other parts of DOD, are to support the development of future, more capable shipboard lasers.

The Navy has been developing EMRG for several years. It was originally conceived as a naval surface fire support (NSFS) weapon for supporting Marines and other friendly forces ashore. Subsequently, it was determined that EMRG could also be used for air and missile defense, which strengthened Navy interest in EMRG development. The Navy is continuing development work on EMRG, but it is unclear when production-model EMRGs will be installed on Navy ships. The Navy's FY2021 budget submission requests $9.5 million in FY2021 for continued development of EMRG, but does not appear to program any additional development funding for EMRG in FY2022-FY2025.

As the Navy was developing EMRG, it realized that the guided projectile being developed for EMRG could also be fired from powder guns, including 5-inch guns on Navy cruisers and destroyers and 155 mm artillery guns operated by the Army and Marine Corps. The concept of firing the projectile from powder guns is referred to as GLGP and HVP. One potential advantage of HVP/GLGP is that, once developed, it can be rapidly deployed on Navy cruisers and destroyers and in Army and Marine Corps artillery units, because the powder guns in question already exist.

In addition to the question of whether to approve, reject, or modify the Navy's FY2021 funding requests for SSLs, EMRG, and HVP/GLGP, issues for Congress include the following:

- whether the Navy is moving too quickly, too slowly, or at about the right speed in its efforts to develop these weapons;
- the Navy's plans for transitioning these weapons from development to procurement and fielding of production models aboard Navy ships; and
- whether Navy the Navy's shipbuilding plans include ships with appropriate amounts of space, weight, electrical power, and cooling capacity to accommodate these weapons.

Contents

Introduction 1
Issue for Congress 1
Scope of Report 1
Background 2
Strategic and Budgetary Context 2
Concern About Survivability of Navy Surface Ships 2
Depth of Magazine and Cost Exchange Ratio 2
Solid State Lasers (SSLs) 3
Overview 3
Earlier Developments 4
Current Development Roadmap 5
SSL-TM 8
ODIN 13
SNLWS Increment 1 (HELIOS) 16
HELCAP 20
Remaining Development Challenges 21
Electromagnetic Railgun (EMRG) and Gun-Launched Guided Projectile (GLGP) 22
EMRG 22
GLGP 26
Remaining Development Challenges 35
Transitioning from Development to Procurement 36
Issues for Congress 37
Legislative Activity for FY2021 38
Summary of Congressional Action on FY2021 Funding 38
FY2021 National Defense Authorization Act (H.R. 6395/S. 4049) 39
House 39
Senate 39
FY2021 DOD Appropriations Act (H.R. 7617) 40
House 40

Figures

Figure 1. Laser Weapon System (LaWS) on USS *Ponce* 5
Figure 2. Laser Weapon System (LaWS) on USS *Ponce* 6
Figure 3. Navy Laser Weapon Development Approach 7
Figure 4. ONR Graphic of SSL-TM Laser System 9
Figure 5. Navy Graphic of SSL-TM Laser System 10
Figure 6. Reported SSL-TM Laser Being Transported 10
Figure 7. Reported SSL-TM Laser Being Transported 11
Figure 8. Reported SSL-TM Laser Being Transported 12
Figure 9. Reported Laser Turret on USS *Dewey* 14
Figure 10. Reported Laser Turret on USS *Dewey* 14
Figure 11. HELIOS System on DDG-51 Destroyer 17

Figure 12. HELIOS System on DDG-51 Destroyer 18
Figure 13. Industry-Built EMRG Prototype Demonstrator 23
Figure 14. Industry-Built EMRG Prototype Demonstrator 24
Figure 15. Photograph Showing HVP 27
Figure 16. HVP 28
Figure 17. HVP Launch Packages 29
Figure 18. HVP Application to Various Launchers 31
Figure 19. Navy Slide Depicting HVP Operations Against Various Target Types 32

Tables

Table 1. Summary of Congressional Action on FY2021 Funding 38

Appendixes

Appendix. Potential Advantages and Limitations of Shipboard Lasers 41

Contacts

Author Information 43

Introduction

Issue for Congress

This report provides background information and issues for Congress on three new ship-based weapons being developed by the Navy—solid state lasers (SSLs), the electromagnetic railgun (EMRG),[1] and the gun-launched guided projectile (GLGP), also known as the hypervelocity projectile (HVP)—that could substantially improve the ability of Navy surface ships to defend themselves against surface craft, unmanned aerial vehicles (UAVs), and eventually anti-ship cruise missiles (ASCMs).

Any one of these three new weapons, if successfully developed and deployed, might be regarded as a "game changer" for defending Navy surface ships against enemy missiles and UAVs. If two or three of them are successfully developed and deployed, the result might be considered not just a game changer, but a revolution. Rarely has the Navy had so many potential new types of surface-ship air-defense weapons simultaneously available for development and potential deployment.

The issue for Congress is whether to approve, reject, or modify the Navy's acquisition strategies and funding requests for these three potential new weapons. Congress's decisions on this issue could affect future Navy capabilities and funding requirements and the defense industrial base.

This report supersedes an earlier CRS report that provided an introduction to potential Navy shipboard lasers.[2] Another CRS report provides an overview of the strategic and budgetary context in which the programs covered in this report, and other Navy programs, may be considered.[3]

Scope of Report

High-energy lasers (HELs) and railguns are being developed by multiple parts of the Department of Defense (DOD), not just the Navy.[4] HELs, railguns, and GLGP have potential application to military aircraft and ground forces equipment, not just surface ships. And SSLs, EMRG, and GLGP could be used for performing missions other than defense against missiles, UAVs, and surface craft. In particular for the Navy and Marine Corps, EMRG could provide the Navy with a new naval surface fire support (NSFS) weapon for attacking land targets in support of Marines or other friendly ground forces ashore. This report focuses on Navy efforts to develop SSLs, EMRG, and GLGP for potential use in defending Navy surface ships against UAVs and missiles.

---

[1] Railgun is also spelled as rail gun; EMRG is also abbreviated as EM railgun.

[2] CRS Report R41526, *Navy Shipboard Lasers for Surface, Air, and Missile Defense: Background and Issues for Congress*, by Ronald O'Rourke. This earlier CRS report has been archived and remains available as a supplementary reference source on potential Navy shipboard lasers.

[3] CRS Report RL32665, *Navy Force Structure and Shipbuilding Plans: Background and Issues for Congress*, by Ronald O'Rourke. See also CRS Report R43838, *Renewed Great Power Competition: Implications for Defense—Issues for Congress*, by Ronald O'Rourke, and CRS Report R44891, *U.S. Role in the World: Background and Issues for Congress*, by Ronald O'Rourke and Michael Moodie.

[4] For a discussion of Army laser development programs, see CRS Report R45098, *U.S. Army Weapons-Related Directed Energy (DE) Programs: Background and Potential Issues for Congress*, by Andrew Feickert.

Background

Strategic and Budgetary Context

Concern About Survivability of Navy Surface Ships

Although Navy surface ships have a number of means for defending themselves against missiles and UAVs,[5] some observers are concerned about the survivability of Navy surface ships in potential combat situations against adversaries, such as China, that are armed with large numbers of missiles, including advanced models, and large numbers of UAVs.[6] Concern about this issue has led some observers to conclude that the Navy's surface fleet in coming years might need to avoid operating in waters that are within range of these weapons, or that the Navy might need to move toward a different and more distributed fleet architecture that relies less on larger surface ships and more on smaller surface ships, unmanned vehicles, and submarines.[7] Perspectives on whether it would be cost effective to spend money on the procurement and operation of larger surface ships might be influenced by views on whether such ships can adequately defend themselves against enemy missiles and UAVs.

Depth of Magazine and Cost Exchange Ratio

Two key limitations that Navy surface ships currently have in defending themselves against missiles and UAVs are limited depth of magazine and unfavorable cost exchange ratios. Limited depth of magazine refers to the fact that Navy surface ships can use surface-to-air missiles (SAMs) and their Close-in Weapon System (CIWS) Gatling guns to shoot down only a certain number of enemy missiles and UAVs before running out of SAMs and CIWS ammunition[8]—a situation (sometimes called "going Winchester") that can require a ship to withdraw from battle,

[5] These include the following: operating ships in ways that make it hard for others to detect and accurately track Navy ships; jamming or destroying enemy targeting sensors; interfering with the transmission of targeting data from sensors to weapon launchers; attacking missile launchers (which can be land-based launchers, ships, submarines, or aircraft); and countering missiles and UAVs headed toward Navy ships. Navy measures for countering missiles and UAVs headed toward Navy ships include the following: jamming a missile's or UAV's sensor or guidance system; using decoys of various kinds to lure enemy missiles away from Navy ships; and shooting down enemy missiles and UAVs with surface-to-air missiles and the Phalanx Close-In Weapon System (CIWS), which is essentially a radar-controlled Gatling gun. Employing all these measures reflects a long-standing Navy approach of creating a multi-layered defense against enemy missiles, and of attacking the enemy's "kill chain" at multiple points so as to increase the chances of breaking the chain. (The kill chain is the sequence of steps that an enemy must complete to conduct a successful missile attack on a Navy ship. Interfering with any step in the sequence can break the kill chain and thereby prevent or defeat the attack.)

[6] For more on China's anti-ship missiles and UAVs, see CRS Report RL33153, *China Naval Modernization: Implications for U.S. Navy Capabilities—Background and Issues for Congress*, by Ronald O'Rourke. Enemy missiles are not the only reasons that some observers are concerned about the future survivability of U.S. Navy surface ships in combat situations; observers are also concerned about threats to U.S. Navy surface ships posed by small boats, mines, and torpedoes.

[7] For additional discussion, see CRS Report RL32665, *Navy Force Structure and Shipbuilding Plans: Background and Issues for Congress*, by Ronald O'Rourke.

[8] Navy cruisers have 122 missile cells; Navy destroyers have 90 or 96 missile cells. Some of these cells are used for storing and launching Tomahawk land attack cruise missiles or anti-submarine rockets. The remainder are available for storing and launching SAMs. A Navy cruiser or destroyer might thus be armed with a few dozen or several dozen SAMs for countering missiles and UAVs. Countering missiles and UAVs with SAMs might sometimes require shooting two SAMs at each enemy missile.

spend time travelling to a safe reloading location (which can be hundreds of miles away),[9] and then spend more time traveling back to the battle area.

Unfavorable cost exchange ratios refer to the fact that a SAM used to shoot down a missile or UAV can cost the Navy more (perhaps much more) to procure than it cost the adversary to build or acquire the missile or UAV. Procurement costs for Navy air-defense missiles range from several hundred thousand dollars per mission to a few million dollars per missile, depending on the type. In combat scenarios against an adversary with a limited number of missiles or UAVs, an unfavorable cost exchange ratio can be acceptable because it saves the lives of Navy sailors and prevents very expensive damage to Navy ships. But in combat scenarios (or an ongoing military capabilities competition) against a country such as China that has many missiles and UAVs and a capacity for building or acquiring many more, an unfavorable cost exchange ratio can become a very expensive—and potentially unaffordable—approach to defending Navy surface ships against missiles and UAVs, particularly in a context of constraints on U.S. defense spending and competing demands for finite U.S. defense funds.

SSLs, EMRG, and GLGP offer a potential for dramatically improving depth of magazine and the cost exchange ratio:

- **Depth of magazine.** SSLs are electrically powered, drawing their power from the ship's overall electrical supply, and can be fired over and over, indefinitely, as long as the laser continues to work and the ship has fuel to generate electricity. EMRG projectiles and GLGPs can be stored by the hundreds in a Navy surface ship's weapon magazine.
- **Cost exchange ratio.** An SSL can be fired for a marginal cost of less than one dollar per shot (which is the cost of the fuel needed to generate the electricity used in the shot), while GLGP reportedly had an estimated unit procurement cost in 2018 of about $85,000.[10]

High-energy SSLs that have enough beam power to counter small boats and UAVs, but not enough to counter missiles, could nevertheless indirectly improve a ship's ability to counter missiles by permitting the ship to use fewer of its SAMs for countering UAVs, and more of them for countering missiles. Similarly, even though GLGPs fired from 5-inch powder guns might not be able to counter anti-ship ballistic missiles (ASBMs), they could indirectly improve a ship's ability to counter ASBMs by permitting the ship to use fewer of its SAMs for countering ASCMs and more of its SAMs for countering ASBMs.

Solid State Lasers (SSLs)

Overview

The Navy in recent years has leveraged both significant advancements in industrial SSLs and decades of research and development work on military lasers done by other parts of DOD to

[9] The missile cells on a Navy cruiser or destroyers are clustered together in an installation called a Vertical Launch System (VLS). VLS cells cannot be reloaded while the ship is underway; a ship needs to return to a port or a calm anchorage to reload its VLS.

[10] Sources for cost figure for GLGP: Sydney J. Freedberg Jr., "$86,000 + 5,600 MPH = Hyper Velocity Missile Defense," *Breaking Defense*, January 26, 2018; Jared Keller, "The U.S. Military Has a New 'Bullet' That Attacks At Mach Six (with 100 Mile Range)," *National Interest*, February 3, 2018.

make substantial progress toward deploying high-energy SSLs on Navy surface ships.[11] Navy surface ships would use high-energy SSLs initially for jamming or confusing (i.e., "dazzling") intelligence, surveillance, and reconnaissance (ISR) sensors, for countering small boats and UAVs, and potentially in the future for countering enemy missiles as well. High-energy SSLs on Navy ships would generally be short-range defensive weapons—they would generally counter targets at ranges of about one mile to perhaps eventually a few miles.

In addition to a low marginal cost per shot and deep magazine, potential advantages of shipboard lasers include fast engagement times, an ability to counter radically maneuvering missiles, an ability to conduct precision engagements, and an ability to use lasers for graduated responses ranging from detecting and monitoring targets to causing disabling damage. Potential limitations of shipboard lasers relate to line of sight; atmospheric absorption, scattering, and turbulence (which prevent shipboard lasers from being all-weather weapons); an effect known as thermal blooming that can reduce laser effectiveness; countering saturation attacks; possible adversary use of hardened targets and countermeasures; and risk of collateral damage, including damage to aircraft and satellites and permanent damage to human eyesight, including blinding. These potential advantages and limitations are discussed in greater detail in the **Appendix**.

Earlier Developments

Earlier developments in the Navy's efforts to develop high-energy SSLs include the following:

- Between 2009 and 2012, the Navy successfully tested a prototype SSL called the Laser Weapon System (LaWS) against UAVs in a series of engagements that took place initially on land and subsequently on a Navy ship at sea. LaWS had a reported beam power of 30 kilowatts (kW).[12]
- Between 2010 and 2011, the Navy tested another prototype SSL called the Maritime Laser Demonstration (MLD) in a series of tests that culminated with an MLD installed on a Navy ship successfully engaging a small boat.
- In August 2014, the Navy installed LaWS on the USS *Ponce* (pronounced pon-SAY)—a converted amphibious ship that operated in the Persian Gulf as an interim Afloat Forward Staging Base (AFSB[I])[13]—to conduct evaluation of shipboard lasers in an operational setting against swarming boats and swarming UAVs (**Figure 1** and **Figure 2**).
- In December 2014, the Navy declared LaWS on the *Ponce* to be an "operational" system.[14] *Ponce* remained in the Persian Gulf until it was relieved in September

[11] In discussions of potential Navy shipboard lasers, a high-energy laser is generally considered to be a laser with a beam power of at least 10 kilowatts (kW). In addition to developing SSLs, the Navy has also performed research and development work on a different kind of laser, called the free electron laser (FEL). For background information on the FEL, see CRS Report R41526, *Navy Shipboard Lasers for Surface, Air, and Missile Defense: Background and Issues for Congress*, by Ronald O'Rourke.

[12] See, for example, Mike McCarthy, "Navy Authorized To Use Ship-Based Laser In Battle," *Defense Daily*, December 11, 2014: 3.

[13] As an interim AFSB, *Ponce* operated in the Persian Gulf as a "mother ship" for Navy helicopter and small boat operations. Ships referred to as AFSBs are now referred to as Expeditionary Sea Base ships (ESBs).

[14] Mike McCarthy, "Navy Authorized To Use Ship-Based Laser In Battle," *Defense Daily*, December 11, 2014: 3; Sam LaGrone, "U.S. Navy Allowed to Use Persian Gulf Laser for Defense," *USNI News*, December 10, 2014; Philip Ewing, "Navy Declares Laser Weapon 'Operational,'" *Politico Pro (Pro Defense Report)*, December 10, 2014; Statement of Rear Admiral Mathias W. Winter, United States Navy, Chief of Naval Research, Before the Emerging Threats and Capabilities Subcommittee of the House Armed Services Committee on The Fiscal Year 2017 Budget Request,

2017 by its replacement, the new-construction Expeditionary Sea Base ship *Lewis B. Puller* (ESB-3). *Ponce* returned to the United States and was decommissioned in October 2017, at which point LaWS was removed from Ponce. LaWS is to be refurbished to serve as a land-based test asset for the HELIOS effort discussed below.[15]

Figure 1. Laser Weapon System (LaWS) on USS *Ponce*

Source: Navy photograph dated November 16, 2014, accompanying David Smalley, "Historic Leap: Navy Shipboard Laser Operates in Arabian Gulf," *Navy News Service*, December 10, 2014, accessed August 12, 2015, at http://www.navy.mil/list_all.asp?id=84805.

Current Development Roadmap

The Navy is currently developing SSLs with improved capability for countering surface craft and UAVs, and eventually a capability for countering ASCMs. Navy efforts to develop these more-capable lasers include

- the Solid State Laser Technology Maturation (SSL-TM) effort;
- the Optical Dazzling Interdictor, Navy (ODIN);
- the Surface Navy Laser Weapon System (SNLWS) Increment 1, also known as the high-energy laser with integrated optical dazzler and surveillance (HELIOS); and
- the High Energy Laser Counter-ASCM Program (HELCAP).

February 24, 2016, p. 15.

[15] Source: Navy briefing to CRS and the Congressional Budget Office (CBO) on SNLWS program, April 27, 2018. For additional discussion of LaWS, see U.S. Navy, *U.S. Navy Program Guide 2017*, pp. 180-181, which refers to LaWS as the SSL-QRC (solid state laser—quick reaction capability).

Figure 2. Laser Weapon System (LaWS) on USS *Ponce*

Source: Navy photograph dated November 17, 2014, accompanying David Smalley, "Historic Leap: Navy Shipboard Laser Operates in Arabian Gulf," *Navy News Service*, December 10, 2014, accessed August 12, 2015, at http://www.navy.mil/list_all.asp?id=84805.

As shown in **Figure 3**, first three efforts above are included in what the Navy calls the Navy Laser Family of Systems (NFLoS). (The fourth NFLoS effort shown in **Figure 3**, the Ruggedized High Energy Laser (RHEL) effort, is now completed.) As also shown in **Figure 3**, under the Navy's laser development approach, NFLOS and HELCAP, along with technologies developed by other parts of DOD, are to support the development of future, more-capable lasers referred to as SNLWS Increment 2 and SNLWS Increment 3.

Figure 3. Navy Laser Weapon Development Approach

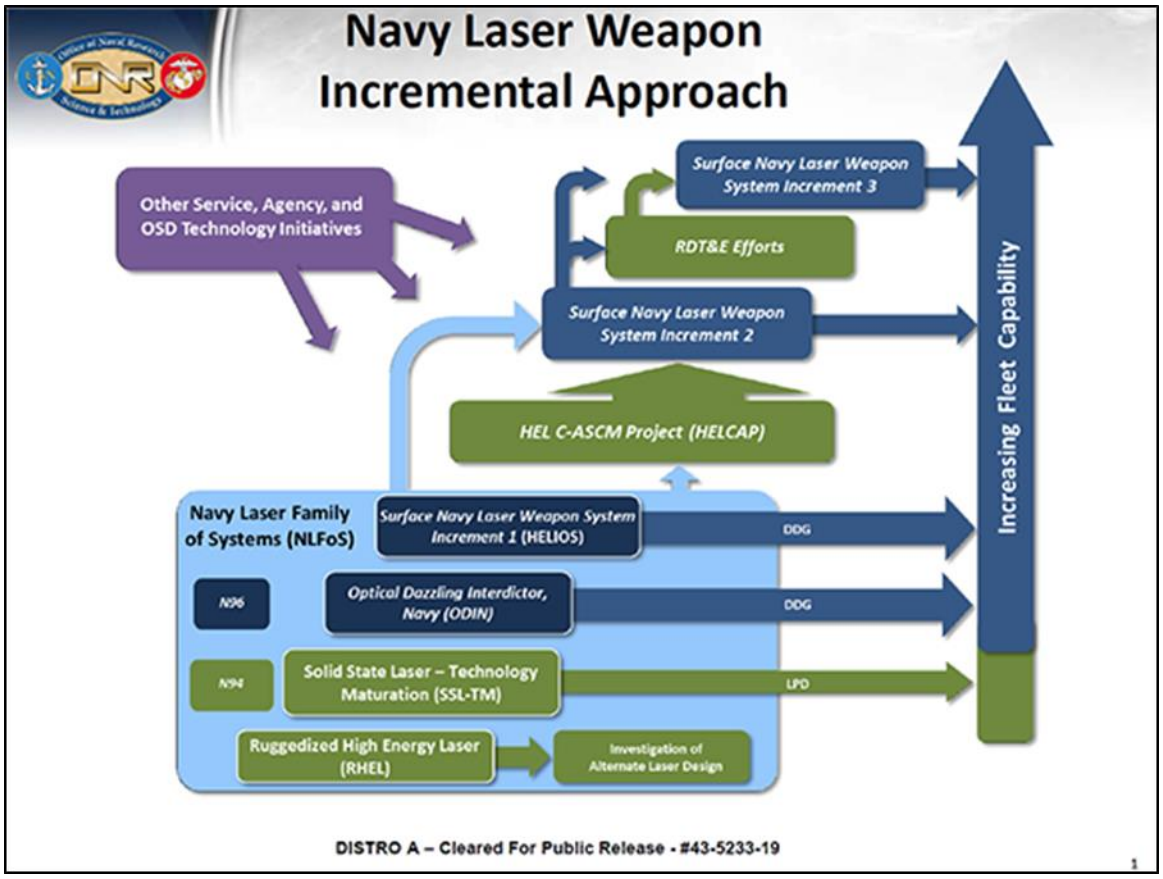

Source: Navy briefing slide provided by Navy Office of Legislative Affairs to CRS on May 6, 2019.

An October 29, 2019, press report states

> The Pentagon is pushing to double the power output of lasers, to over 300 kilowatts, so they can defeat a threat found in arsenals from the Russian army to the Chinese navy to Iran: cruise missiles.
>
> "The current technology for laser sources is in that 100-150 kw class," said Frank Peterkin, a senior scientist at the Office of Naval Research. "It's not enough. Even if you take all the other elements of a laser weapon and have them be perfect" – the targeting, the cooling, the beam control—"we still don't have enough power. It's a common enough problem, it makes sense to [approach] it in a joint fashion," Peterkin continued. "OSD's Dr. Karr…. is leading a joint DoD-wide initiative to scale up power levels, because we all need more power."…
>
> The Navy, which wants lasers on its ships, is probably the most enthusiastic of all. "The ability to take on cruise missiles—I'd say that is the predominant goal of the Navy's current efforts …using lasers for ship defense against anti-ship cruise missiles," Peterkin said….
>
> "We talk ad nauseam about power…because it's the easiest, simplest metric," Peterkin said. "It's certainly necessary but not sufficient.
>
> "We need to understand those targets better," Peterkin continued, "because the advantage of a laser weapon is precision, and the disadvantage of a laser weapon is precision." While a hit-to-kill missile like the modern Patriot will just crash into the target and smash it, a laser beam focuses precisely on a specific spot on the target and burns through. If you pick the wrong spot, you might not damage anything vital. If the spot you picked is tougher than

> your intelligence reports or your computer models said it was, you might not do enough damage in time.
>
> That's a particularly acute problem with supersonic cruise missiles, whose nose cones are already reinforced to survive the heat of friction from their rapid progress through the air. That makes these kinds of cruise missiles largely immune to a laser shooting them from dead ahead. It's much more effective for the laser to shoot the incoming cruise missile from the side, which in turn means the laser shouldn't be positioned right on top of the target, but nearby – for example on an escorting warship.
>
> That's why the service envisions its Surface Navy Laser Weapon System evolving in three stages, Peterkin said:
>
> > - Increment 1 is the 60 kW HELIOS laser being installed on ships to destroy drones and cripple small attack craft;
> >
> > - Increment 2 will ramp up the power enough to take side shots against cruise missiles, so a ship with it installed can use it to defend other ships nearby, but not itself; and
> >
> > - Increment 3 will be still more powerful, able to burn through the nose-cone in a head-on shot, allowing a ship with it installed to defend itself.[16]

SSL-TM

The Navy's FY2021 budget submission states that the SSL Technology Maturation (SSL-TM) program

> is developing an integrated Laser Weapons System Demonstrator (LWSD) that will be installed on [the amphibious ship] USS Portland (LPD-27) during FY 2019…. SSL-TM will provide a new capability to the Fleet to address known capability gaps against asymmetric threats (UAS, small boats, and ISR sensors) and will inform future acquisition strategies, system designs, integration architectures, and fielding plans for laser weapon systems.[17]

The Navy announced in January 2018 that it intended to install LWSD on *Portland*.[18] Under the Navy's FY2021 budget submission, the demonstration on *Portland* is to continue through FY2022, and the system is to be de-installed in early FY2023.[19]

Industry teams led by BAE Systems, Northrop Grumman, and Raytheon, among others, competed to develop an LWSD with a beam power of up to 150 kW. On October 22, 2015, DOD announced that it had selected Northrop Grumman as the winner of the SSL-TM competition.[20]

---

[16] Sydney J. Freedberg Jr., "Lasers To Kill Cruise Missiles Sought By Navy, Air Force, Army," *Breaking Defense*, October 29, 2019.

[17] *Department of Defense Fiscal Year (FY) 2021 Budget Estimates, Navy, Justification Book Volume 2 of 5, Research, Development, Test & Evaluation, Navy*, February 2020, p. 188. For additional discussion of SSL-TM, see U.S. Navy, *U.S. Navy Program Guide 2017*, pp. 180-181.

[18] Megan Eckstein, "LPD Portland Will Host ONR Laser Weapon Demonstrator, Serve as RIMPAC 2018 Flagship," *USNI News*, January 10, 2018; Richard Abott, "Next Navy Amphib Will Feature Laser Weapon Demo, Chosen As Flagship For RIMPAC 2018," *Defense Daily*, January 11, 2018.

[19] *Department of Defense Fiscal Year (FY) 2021 Budget Estimates, Navy, Justification Book Volume 2 of 5, Research, Development, Test & Evaluation, Navy*, February 2020, p. 191.

[20] DOD contract award announcements for October 22, 2015, accessed December 18, 2015, at http://www.defense.gov/News/Contracts/Contract-View/Article/625630. See also "US Navy Selects Northrop Grumman to Design and Produce Shipboard Laser Weapon System Demonstrator," December 22, 2015, accessed March 18, 2016, at http://www.globenewswire.com/newsarchive/noc/press/pages/news_releases.html?d=10158731. See also Richard

Figure 4 is an Office of Naval Research (ONR) graphic illustration of the SSL-TM system and its components if it were installed installed on the Navy's Self Defense Test Ship (the ex-USS *Paul F. Foster* [DD-964], an old Spruance [DD-963] class destroyer). **Figure 5** is a Navy graphic illustration of the SSL-TM system as it will appear on *Portland*.

An October 18, 2019, blog post included photographs (**Figure 6**, **Figure 7**, and **Figure 8**) of a device the blog post identified as the SSL-TM laser being transported from Redondo Beach to San Diego for installation on *Portland*.[21]

Figure 4. ONR Graphic of SSL-TM Laser System

Artist's rendering of installation on Navy's Self Defense Test Ship

Source: Slide from February 2016 ONR briefing to CRS on SSL-TM program, received from Navy Office of Legislative Affairs February 26, 2016.

Scott, "Northrop Grumman To Build on MLD for SSL Demonstrator," *IHS Jane's International Defence Review*, February 2016: 5; Michael Fabey and Kris Osborn, "Navy to Fire 150Kw Ship Laser Weapon From Destroyers, Carriers," *Scout Warrior*, January 23, 2017.

[21] Tyler Rogoway, "Mysterious Object Northrop Is Barging From Redondo Beach Is A High-Power Naval Laser," *The Drive*, October 18, 2019.

Figure 5. Navy Graphic of SSL-TM Laser System

Artist's rendering of installation on USS Portland

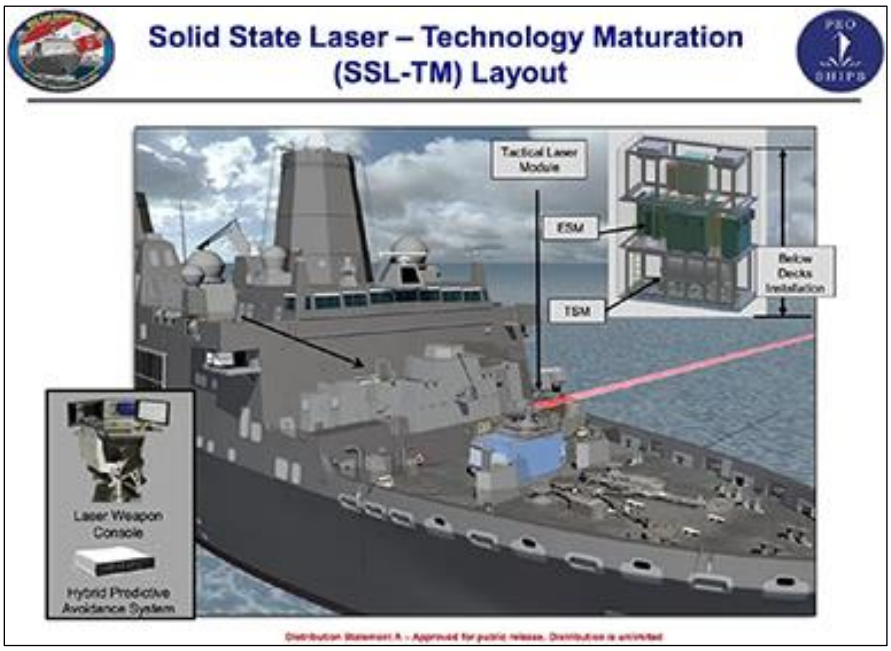

Source: Navy briefing slide accompanying Tyler Rogoway, "Mysterious Object Northrop Is Barging From Redondo Beach Is A High-Power Naval Laser," *The Drive*, October 18, 2019. The blog post credits the slide to the Navy and describes it as a "recent slide."

Figure 6. Reported SSL-TM Laser Being Transported

Source: Photograph accompanying Tyler Rogoway, "Mysterious Object Northrop Is Barging From Redondo Beach Is A High-Power Naval Laser," *The Drive*, October 18, 2019. The photograph is a cropped version of a photograph printed in full elsewhere in the blog post. The uncropped version is credited to "Matt Hartman/ ShoreAloneFilms.com."

Figure 7. Reported SSL-TM Laser Being Transported

Source: Photograph accompanying Tyler Rogoway, "Mysterious Object Northrop Is Barging From Redondo Beach Is A High-Power Naval Laser," *The Drive*, October 18, 2019. The photograph is credited to "KABC CH7 Screencap."

Figure 8. Reported SSL-TM Laser Being Transported

Source: Photograph accompanying Tyler Rogoway, "Mysterious Object Northrop Is Barging From Redondo Beach Is A High-Power Naval Laser," *The Drive*, October 18, 2019. The photograph is credited to "Matt Hartman/ ShoreAloneFilms.com."

A March 1, 2020, press report stated

> The amphibious transport dock USS Portland (LPD 27) was fitted in the fall of 2019 with a new, 150-kilowatt weapon developed by the Office of Naval Research (ONR) and Northrop Grumman. The weapon, part of the Solid-State Laser Technology Maturation (SSL-TM) effort, is significantly more powerful than the 33 kW Laser Weapon System (LaWS) installed in 2014 aboard the now-decommissioned afloat forward staging base ship Ponce (AFSB 15).
>
> The laser aboard Portland is installed forward in the ship in a trunk structure originally intended for a never-fitted vertical launch system. The LPD was selected because the ship had the space and weight capacity along with already-installed electrical cables to ease the laser installation.
>
> The SSL-TM laser is in a trainable mounting with a clear field of fire forward and to about 65 degrees abaft each beam. No publicly available images of the weapon firing are yet known, although the system underwent testing last year on the White Sands Missile Range in New Mexico.
>
> Portland has been underway since the weapon was installed and in mid-February took part in Exercise Iron Fist at Camp Pendleton, California, but testing of the laser is expected to begin later this year. According to the Naval Sea System's (NAVSEA) Command LPD program office in late 2018, intentions are for the Portland to deploy with the weapon later in 2020 after tests are completed, but Navy officials declined to confirm to Defense and Aerospace Report whether that plan is still in place.

> The 2020 test program for the SSL-TM system aboard Portland was discussed in the Pentagon's Fiscal 2021 defense budget request sent to Congress on Feb. 10.
>
> "At-sea testing and experimentation will be conducted with full laser weapon system demonstrator" during 2020, according to the budget documents. "During this period the technical performance will be evaluated in various atmospheric and sea state conductions while conducting operational missions and exercises. Lessons learned from operations and maintenance will be documented to inform development of future laser weapons systems development efforts."
>
> It is not yet clear if the laser will become a permanent feature aboard Portland.[22]

On May 22, 2020, the Navy announced that *Portland* had used its LWSD to successfully disable a UAV in an at-sea test that was conducted on May 16, 2020.[23]

ODIN

The Navy's FY2021 budget submission states that Optical Dazzling Interceptor, Navy (ODIN) effort

> provides near-term, directed energy, shipboard Counter-Intelligence, Surveillance, and Reconnaissance (C-ISR) capabilities to dazzle Unmanned Aerial Systems (UASs) and other platforms that address urgent operational needs of the Fleet. FY 2018 was the first year of funding[,] which supports the design, development, procurement and installation of ODIN standalone units over the FYDP [Future Years Defense Plan], for deployment on DDG 51 Flt IIA surface combatants [i.e., Flight IIA DDG-51 class destroyers]….
>
> The ODIN is a government designed, developed, and produced system that will provide stand alone units for use on DDG 51 class ships.[24]

Funding requested for the ODIN effort for FY2021 would complete the procurement, assembly, checkout, integration, test and evaluation, and installation of ODIN units 4 and 5; continue the procurement, assembly, checkout, integration, test and evaluation of units 6, 7, and 8; and provide for the operation and sustainment of units 1 through 5.[25]

A November 9, 2019, blog entry showed a photograph of the Navy destroyer *Dewey* (DDG-105) with an apparent laser turret installed in front of its deckhouse (**Figure 9**). The blog entry speculated that the installation is most likely an ODIN installation.[26] A July 7, 2020, press article that reported remarks made by a Navy official stated that the system on *Dewey* is an ODIN installation.[27] A May, 26, 2020, press report included an additional photo (**Figure 10**).

---

[22] Christopher P. Cavas, "Lasers Sprout in San Diego," *Defense & Aerospace Report*, March 1, 2020.

[23] Commander, U.S. Pacific Fleet Public Affairs, "USS Portland Conducts Laser Weapon System Demonstrator Test," *Navy News Service*, May 22, 2020. See also Megan Eckstein, "VIDEO: USS Portland Fires Laser Weapon, Downs Drone in First At-Sea Test," *USNI News*, May 22, 2020; Paul McLeary, "US Warship Fries Drone With Powerful New Laser," *Breaking Defense*, May 22, 2020; Geoff Ziezulewicz, "Watch This Ship-mounted Navy Laser Shoot Down a Drone," *Navy Tim*es, May 26, 2020.

[24] *Department of Defense Fiscal Year (FY) 2021 Budget Estimates, Navy, Justification Book Volume 2 of 5, Research, Development, Test & Evaluation, Navy*, February 2020, pp. 1031, 1032.

[25] *Department of Defense Fiscal Year (FY) 2021 Budget Estimates, Navy, Justification Book Volume 2 of 5, Research, Development, Test & Evaluation, Navy*, February 2020, p. 1031. See also Joseph Trevithick, "Navy To Add Laser Weapons To At Least Seven More Ships In The Next Three Years," *The Drive*, July 8, 2020.

[26] Tyler Rogoway, "Mysterious Laser Turret Appears On US Navy Destroyer USS Dewey," *The Drive*, November 9, 2019.

[27] Richard R. Burgess, "More Powerful Laser Systems Are Needed, Navy Technologist Says," *Seapower*, July 7, 2020.

Figure 9. Reported Laser Turret on USS *Dewey*

Source: Photograph accompanying Tyler Rogoway, "Mysterious Laser Turret Appears On US Navy Destroyer USS Dewey," *The Drive*, November 9, 2019. The photograph as printed in the blog post includes the red arrow indicating the apparent laser installation.

Figure 10. Reported Laser Turret on USS *Dewey*

Source: Photograph accompanying Daniel P. Taylor, "The ODIN Shipboard Laser: Science Fiction No More," *Seapower*, May 26, 2020. The article credits the photograph to Chris Cavas.

A February 21, 2020, press report stated

> The newest weapon in the Navy's arsenal is a laser dazzler that can stymie enemy drones threatening surface ships. And now it's installed aboard an active destroyer.
>
> The system was installed aboard the Arleigh Burke-class destroyer Dewey in November, but not announced until this week, officials with Naval Sea Systems Command told Military.com.
>
> Called Optical Dazzling Interdictor, Navy, or ODIN, the system is the technological successor of the Laser Weapons System, or LaWS, a 30-kilowatt laser installed on the amphibious transport dock Ponce in 2014….
>
> The capabilities and specifications of ODIN have been closely guarded; a NAVSEA official declined to share additional information about how the system will be tested or what it can do….
>
> "Going from an approved idea to installation in two and a half years, ODIN's install on Dewey will be the first operational employment of the stand-alone system that functions as a dazzler," officials said in a news release. "The system allows the Navy to rapidly deploy an important, new capability to the Navy's surface force in combating Unmanned Aircraft Systems (UAS) threats."[28]

A March 1, 2020, press report stated

> While the Navy publicized the [ODIN] laser installation aboard [the amphibious ship] Portland, a similar laser weapon was fitted in more secrecy aboard the destroyer USS Dewey (DDG 105), which appeared late last year with a different system installed during a shipyard overhaul.
>
> Little official information was available about the Dewey's system until Feb. 20, when NAVSEA issued a release describing the Dewey's Optical Dazzling Interdictor, Navy (ODIN) system as "a laser weapon system that allows a ship to counter unmanned aerial systems."
>
> According to the release, the ODIN system was approved in early 2017 based on an urgent need requirement from US Pacific Command. It was developed by Naval Surface Warfare Dahlgren, Virginia and installed after two and half years. The system, NAVSEA said, "will be the first operational employment of the stand-alone system that functions as a dazzler. The system allows the Navy to rapidly deploy an important, new capability to the Navy's surface force in combating Unmanned Aircraft Systems (UAS) threats."
>
> ODIN is the first operational deployment of a laser dazzler, a Navy official said, adding that the stand-alone system is equipped with a laser that can temporarily degrade intelligencegathering capabilities of unmanned aerial systems.
>
> Capt. Danny Hernandez, spokesman for the Navy's acquisition directorate, noted that the laser can "temporarily degrade intelligence-gathering capabilities of unmanned aerial systems," but he did not provide more information about the ODIN system, including its power, lethality and future plans….
>
> The NAVSEA release notes that, "within the next couple of years, the ODIN program will have all [ODIN] units operational within the fleet providing a safer and more technically advanced capability to the US Navy. Lessons learned from ODIN's installation on Dewey will inform installation on future vessels and further development and implementation of Surface Navy Laser Weapon Systems."…

[28] Hope Hodge Seck, "The Navy Has Installed the First Drone-Stopping Laser on a Destroyer," *Military.com*, February 21, 2020. See also Justin Katz, "Navy Installs Laser on Destroyer to Counter Unmanned Intelligence Drones," *Inside Defense*, February 21, 2020.

> ODIN is not the first laser system fitted to the Dewey. A prototype LaWS system was installed on the ship's flight deck in 2012, but that system, also developed by ONR, was never intended to be permanent and was removed after tests.[29]

A May 26, 2020, press report stated

> Earlier this year, the Navy installed the first Optical Dazzling Interdictor, Navy (ODIN) on the Arleigh Burke-class guided missile destroyer USS Dewey….
>
> ODIN took just two and a half years for the Navy to move the system from an approved idea through design, construction and testing to actual installation aboard the Dewey—a notable achievement in defense program development.
>
> "The Pacific Fleet Commander identified this urgent counter-intelligence, surveillance and reconnaissance need, and the chief of naval operations directed us to fill it as quickly as possible," said Cmdr. David Wolfe, head of the directed energy program within the Integrated Warfare Systems program executive office….
>
> Bradley Martin, a senior policy researcher at the Rand Corp., said ODIN is not going to be used like laser weapons you would see in science fiction movies, but rather as something that would scramble a unmanned aerial vehicle's optical sensor. UAVs right now aren't a threat to attack a ship, so destroying them quickly isn't necessary.
>
> "Typically, a UAV is not going to be used as a striking kind of weapon," Martin said.
>
> Instead, the laser would cause a drone to "lose its way" and eventually crash because it loses the ability to target and navigate. Any adversary using the drone to conduct surveillance of Navy activities would lose access to that asset.[30]

SNLWS Increment 1 (HELIOS)

SNLWS Increment 1 is called HELIOS, an acronym meaning high energy laser with integrated optical dazzler and surveillance. The HELIOS effort is focused on rapid development and rapid fielding of a 60 kW-class high-energy laser (with growth potential to 150 kW) and dazzler in an integrated weapon system, for use in countering UAVs, small boats, and ISR sensors, and for combat identification and battle damage assessment. The Navy's FY2021 budget submission states that HELIOS

> Provides a low cost-per-shot capability to address Anti-Surface Warfare and Counter-Intelligence, Surveillance and Reconnaissance (C-ISR) gaps with the ability to dazzle and destroy Unmanned Aerial Systems (UAS) and defeat Fast Inshore Attack Craft (FIAC) while integrated into the AEGIS Combat System on a Flt IIA Destroyer [i.e., Flight IIA DDG-51 class destroyer]. SNLWS provides industry-developed and government integrated capability to the Fleet in as short a timeframe as possible, thereby addressing the National Defense Strategy direction to foster a culture of innovation. SNLWS includes the development of a laser weapon system in the 60 kW or higher class. Competition was utilized for system development and production efforts. SNLWS leverages mature technology that will deliver a mature laser weapon system capability to the Fleet. SNLWS development leverages the Laser Weapon System (LaWS)/Solid State Laser Quick

[29] Christopher P. Cavas, "Lasers Sprout in San Diego," *Defense & Aerospace Report*, March 1, 2020. See also Kris Osborn, "New Destroyer-Fired Laser Weapons Might Stop Hypersonic Missile Attacks," *Warrior Maven*, March 1, 2020, which was republished as Kris Osborn, "Could Naval Lasers Be The Solution To China's Hypersonic Missile Threat?" *National Interest*, March 7, 2020.

[30] Daniel P. Taylor, "The ODIN Shipboard Laser: Science Fiction No More," *Seapower*, May 26, 2020.

Reaction Capability (SSL QRC) and Solid State Laser Technology Maturation (SSL TM)/Laser Weapon System Demonstrator (LWSD) efforts.[31]

Following a full and open competition based on a request for proposals (RFP) released on June 18, 2017, the Navy on January 26, 2018, awarded Lockheed Martin a $150 million contract for the development, manufacture, and delivery of two HELIOS systems—one for installation on a Navy Arleigh Burke (DDG-51) class Aegis destroyer, the other for land-based testing—by FY2020.[32] The contract includes options for up to 14 additional HELIOS systems that if exercised could increase the total value of the contract to $942.8 million.[33]

Under the Navy's FY2021 budget submission, HELIOS is to be delivered to pier in the first quarter of FY2021 for installation on a DDG-51 destroyer, and for the system to remain on the ship for fleet testing and sustainment through at least the end of FY2025.[34] **Figure 11** and **Figure 12** show an artist's renderings of HELIOS installed on a DDG-51.

Figure 11. HELIOS System on DDG-51 Destroyer

Artist's rendering

Source: Lockheed Martin image taken from "Lockheed Martin Receives $150 Million Contract to Deliver Integrated High Energy Laser Weapon Systems to U.S. Navy," Lockheed Martin, March 1, 2018.

[31] *Department of Defense Fiscal Year (FY) 2021 Budget Estimates, Navy, Justification Book Volume 2 of 5, Research, Development, Test & Evaluation, Navy*, February 2020, p. 1021.

[32] See DOD contract awards for January 26, 2018 (Release No: CR-017-18, January 26, 2018); "Lockheed Gets $150m Contract to Install High Energy Laser on a Flight IIA DDG-51 destroyer," *NavalToday.com*, January 29, 2018; Kimberly Underwood, "Navy Selects Lockheed Martin to Deliver Laser Energy Weapon," *Signal*, January 30, 2018; Richard Scott, "Lockheed Martin to Develop HELIOS Laser Weapon for DDG 51 Flight IIA Destroyer," *Jane's Navy International*, January 30, 2018; "Lockheed Martin Receives $150 Million Contract to Deliver Integrated High Energy Laser Weapon Systems to U.S. Navy," Lockheed Martin, March 1, 2018; Sydney J. Freedberg Jr., "First Combat Laser For Navy Warship: Lockheed HELIOS," *Breaking Defense*, March 1, 2018; Jeff Hecht, "Lockheed Martin to Develop Laser Weapons for U.S. Navy Destroyers," *IEEE Spectrum*, March 2, 2018; Justin Bachman, "The Navy Wants a Laser to Blow Drones Out of the Sky," March 2, 2018.

[33] Richard Abott, "HELIOS Laser To Be First Fully Integrated On U.S. Ship," *Defense Daily*, March 5 2018: 10-12.

[34] *Department of Defense Fiscal Year (FY) 2021 Budget Estimates, Navy, Justification Book Volume 2 of 5, Research, Development, Test & Evaluation, Navy*, February 2020, p. 1030.

Figure 12. HELIOS System on DDG-51 Destroyer

Detail from artist's rendering

Source: Detail from Lockheed Martin image taken from "Lockheed Martin Receives $150 Million Contract to Deliver Integrated High Energy Laser Weapon Systems to U.S. Navy," Lockheed Martin, March 1, 2018.

A March 21, 2019, press report states

> The Navy is planning to install the High Energy Laser and Integrated Optical-dazzler with Surveillance (HELIOS) directed energy (DE) system on a DDG-51 Flight IIA destroyer by FY 2021 as it learns how to integrate laser weapons on its ships, a top official said Wednesday [March 20].
>
> Rear Adm. Ron Boxall, director of Navy Surface Warfare, called characterized the Navy's plans to integrate directed energy weapons as "yes we are going to burn the boats if you will, and move forward with this technology."
>
> Boxall said the Navy plans to install a HELIOS system on a West Coast DDG-51 in 2021. "It's already POM'ed in there to do that,[35] hopefully a West Coast destroyer in '21, onboard. We'll be testing it and then putting it aboard the ship."
>
> The Lockheed Martin [LMT] HELIOS will consist of a 60-150 kW single laser beam that can target unmanned aircraft systems (UAS) and small boats. The HELIOS is expected to be integrated on to a destroyer for its lifetime.

[35] This means that the installation has already been included in the Program Objective Memorandum (POM), an internal DOD document that is used to guide the preparation of the next proposed budget that DOD will submit to Congress.

> The weapon will also feed intelligence, surveillance and reconnaissance (ISR) data into the ship's combat system and provide a counter-UAS (C-UAS) ISR dazzler capability. The dazzler uses a lower power setting to confuse or reduce ISR capabilities of a hostile UAS.
>
> Boxall said he is confident increased DE power outputs will come, but he is not yet confident in integrating them into existing combat systems.
>
> "Because if I'm going to burn the boats, I'm going to replace something that I have on ships today doing that mission with these weapons. And if I do that, I've got to be confident that it's going to work and it's going to cover those missions."
>
> He added that if a ship has a new DE laser weapon that will both sense and kill targets, "then I have to make sure it integrates with the other things that I have on my ship that can sense and kill—namely the Aegis weapon system. And so to me the most important aspect of the integrated laser is its integration into my existing combat system, period."
>
> While Boxall is confident the Navy can continue to increase laser weapon power on ship, one major limiting factor is power margin.
>
> The first HELIOS going on a destroyer will go on a Flight IIA ship, but the Flight III as a downside that it uses almost the same hull but focuses more power generation on the new AN/SPY-6 Air and Missile Defense Radar (AMDR). The AMDR will better detect air and missile threats, but "we are out of schlitz with regard to power. We used a lot of power for that and we don't have as much" extra for additional functions.
>
> Boxall said to get a HELIOS on a DDG-51 Flight III, the Navy will have to either remove something or look at "very aggressive power management." This is part of the calculus in the successor to the DDG-51, the Large Surface Combatant (LSC)….
>
> Last year, the Navy awarded Lockheed Martin a $150 million contract to develop two HELIOS systems in early 2018, with one to integrate on a DDG-51 and one for land-based testing….
>
> However, the FY '19 defense authorization bill restricted the Navy to only one HELIOS per fiscal year without first receiving a detailed contracting and acquisition strategy report.
>
> The HELIOS will not merely be bolted on the ship, but integrated into its Aegis combat system to direct the DE weapon….
>
> More recently, in January Lockheed Martin officials said they plan to put HELIOS through a production design review in 2019….[36]

A January 13, 2020, press report stated

> The Navy will put a laser weapon on a Littoral Combat Ship for the first time this year, amid efforts to boost the LCS's lethality and to develop and field a family of laser systems.
>
> USS Little Rock (LCS-9) will receive a laser weapon during its upcoming deployment, Commander of Naval Surface Forces Vice Adm. Richard Brown told reporters. The ship will likely deploy to U.S. 4th Fleet, where sister ship USS Detroit is currently operating.
>
> USNI News understands that Little Rock would be taking on a Lockheed Martin-made 150-kilowatt high energy laser, as part of a risk reduction effort between the company, the Office of Naval Research and the Program Executive Office for Integrated Warfare

[36] Rich Abott, "Navy To 'Burn The Boats' With Laser For Destroyer In 2021, Needs Bugger LSC For Lasers," *Defense Daily*, March 21, 2019. See also Sam LaGrone, "Navy Ready to 'Burn the Boats' with 2021 Laser Installation on a Destroyer," *USNI News*, March 20, 2019; Kyle Mizokami, "The Navy Plans to Put HELIOS Laser Weapon on Destroyer by 2021," *Popular Mechanics*, March 21, 2019; Justin Katz, "HELIOS Set for Critical Design Review in 2020, Delivery in May 2021," *Inside Defense*, May 2, 2019; Marc Selinger, "US Navy Tweaks Destroyer-Based Laser Effort," *Shephard Media*, May 8, 2019.

> Systems. The effort would contribute to a larger layered laser defense effort, a source told USNI News.
>
> The laser weapon would aid the LCS in its surface warfare mission to counter fast-attack craft and unmanned aerial systems and detect incoming targets….
>
> A source told USNI News that, because Lockheed Martin makes the Freedom-variant LCS, it was able to design its 150kw laser with the right interfaces and margins in mind to make it compatible for this kind of at-sea LCS demonstration.[37]

A March 9, 2020, DOD contract award announcement stated

> Lockheed Martin Corp., Baltimore, Maryland, is awarded a $22,436,852 letter contract for the integration, demonstration, testing and operation of the Layered Laser Defense (LLD) weapon system prototype onboard a Navy littoral combat ship while that vessel is underway.… Key areas of work to be performed include development of a prototype structure and enclosure to protect the LLD from ships motion and maritime environment in a mission module format; system integration and test with government-furnished equipment; platform integration and system operational verification and test; systems engineering; test planning; data collection and analysis support; and operational demonstration. Work is expected to be complete by July 2021.[38]

HELCAP

The Navy's FY2021 budget submission states that the HELCAP effort

> will expedite the development, experimentation, integration and demonstration of critical technologies to defeat crossing Anti-Ship Cruise Missiles (ASCM) by addressing the remaining technical challenges, e.g.: atmospheric turbulence, automatic target identification and aim point selection, precision target tracking with low jitter in high clutter conditions, advanced beam control, and higher power HEL development. HELCAP will assess, develop, experiment, and demonstrate the various laser weapon system technologies and methods of implementation required to defeat ASCMs in a crossing engagement.
>
> HELCAP will leverage the knowledge gained in the Navy Laser Family of Systems (NLFoS) efforts:
>
> - Alternative Laser Sources for higher powers, also known as the Ruggedized High Energy Laser (RHEL) activities;
>
> - Solid State Laser Tech Maturation [SSL-TGM] activities that provides initial key enabling technical solutions in high power lasers and beam control, and will provide opportunities for single ship operational and sustainment learning;
>
> - Surface Navy Laser Weapon System Increment 1 (SNLWS Inc. 1) [i.e., HELIOS] project that provides the initial combat system integration and installation knowledge for Aegis platforms, and multi-ship battle force operations knowledge; [and]
>
> - Optical Dazzling Interdictor Navy (ODIN) that provides Counter-ISR technical and fleet operational knowledge.

[37] Megan Eckstein, "Littoral Combat Ship Will Field Laser Weapon as Part of Lockheed Martin, Navy Test," *USNI News*, January 13, 2020.

[38] Department of Defense, "Contracts for March 9, 2020." See also Rich Abott, "Lockheed Martin Nabs $22 Million Contract For Layered Laser Defense Prototype On LCS," *Defense Daily*, March 16, 2020.

> This leveraged knowledge and new HELCAP technical solutions to the C-ASCM problem will enable a fully informed decision to rapidly field an integrated, fleet ready, HEL [hjigh energy laser] Weapon.[39]
>
> The Navy's FY2021 budget submission states that HELCAP activities include "adapting an OSD 300 kW+ laser source for transport and integration with the prototype system…."[40]

Under the Navy's FY2021 budget submission, demonstrations of HELCAP's ability to detect and defeat ASCMs are to occur in the second through fourth quarters of FY2023.[41]

Remaining Development Challenges

In addition to achieving higher beam powers, remaining development challenges for high-energy SSLs include, among other things, making the system rugged enough for extended shipboard use, making the beam director (the telescope-like part of the laser that sends the beam toward the target) suitable for use in a marine environment (where moisture and salt in the air can be harsh on equipment), and integrating the system into the ship's electrical power system and combat system. A January 23, 2015, blog post co-authored by the Office of Naval Research's program officer for the Navy's SSL program states the following:

> In the near term, many challenges remain to develop and operate high-energy laser systems in the maritime environment that are unique to the Navy and Marine Corps. Among these challenges is dealing with the heat generated as power levels increase. A second issue is packing sufficient power on the platform, which will require advanced battery, generator, power conditioning, and hybrid energy technologies. Current laser technologies are approximately 30 percent electrically efficient. Corrosion and contamination of optical windows by shipboard salt spray, dirt, and grime also are technical challenges. In addition, atmospheric turbulence resulting from shifting weather conditions, moisture, and dust is problematic. Turbulence can cause the air over long distances to act like a lens, resulting in the laser beam's diffusing and distorting, which degrades its performance.
>
> Much progress has been made in demonstrating high-energy laser weapon systems in the maritime environment, but there is still much to be done. Additional advances will be required to scale power levels to the hundreds of kilowatts that will make high[-]energy lasers systems robust, reliable, and affordable. Higher power levels are important for the ability to engage more challenging threats and improve the rate and range at which targets can be engaged.
>
> The programs managed by ONR are addressing these remaining issues while positioning this important warfighting capability toward an acquisition program and eventual deployment with the fleet and force.[42]

Skeptics sometimes note that proponents of high-energy military lasers over the years have made numerous predictions about when lasers might enter service with DOD, and that these predictions

---

[39] *Department of Defense Fiscal Year (FY) 2021 Budget Estimates, Navy, Justification Book Volume 2 of 5, Research, Development, Test & Evaluation, Navy*, February 2020, pp. 1011-1012. See also *Department of Defense Fiscal Year (FY) 2021 Budget Estimates, Navy, Justification Book Volume 1 of 5, Research, Development, Test & Evaluation, Navy*, February 2020, p. 415.

[40] *Department of Defense Fiscal Year (FY) 2021 Budget Estimates, Navy, Justification Book Volume 2 of 5, Research, Development, Test & Evaluation, Navy*, February 2020, p. 1012.

[41] *Department of Defense Fiscal Year (FY) 2021 Budget Estimates, Navy, Justification Book Volume 2 of 5, Research, Development, Test & Evaluation, Navy*, February 2020, p. 1020.

[42] Peter Morrison and Dennis Sorenson, "Developing a High-Energy Laser for the Navy," *Future Force*, January 23, 2015, accessed August 13, 2015, at http://futureforce.navylive.dodlive.mil/2015/01/high-energy-laser/. The authors are identified at the end of the post as follows: "Peter Morrison is the Office of Naval Research's program officer for the Navy's Solid-State Laser program. Dennis Sorenson is a contractor with the Office of Naval Research."

repeatedly have not come to pass. Viewing this record of unfulfilled predictions, skeptics have sometimes stated, half-jokingly, that "lasers are X years in the future—and always will be." Laser proponents acknowledge the record of past unfulfilled predictions, but argue that the situation has now changed because of rapid advancements in SSL technology and a shift from earlier ambitious goals (such as developing megawatt-power lasers for countering targets at tens or hundreds of miles) to more realistic goals (such as developing kilowatt-power lasers for countering targets at no more than a few miles). Laser proponents might argue that laser skeptics are vulnerable to what might be called cold plate syndrome (i.e., a cat that sits on a hot plate will not sit on a hot plate again—but it will not sit on a cold plate, either).

Electromagnetic Railgun (EMRG) and Gun-Launched Guided Projectile (GLGP)

EMRG

The Navy since 2005 has been developing EMRG, a cannon that uses electricity rather than chemical propellants (i.e., gunpowder charges) to fire a projectile.[43] In EMRG, "magnetic fields created by high electrical currents accelerate a sliding metal conductor, or armature, between two rails to launch projectiles at [speeds of] 4,500 mph to 5,600 mph,"[44] or roughly Mach 5.9 to Mach 7.4 at sea level.[45] Like SSLs, EMRG draws its power from the ship's overall electrical supply.[46]

The Navy originally began developing EMRG as a naval surface fire support (NSFS) weapon for supporting U.S. Marines operating ashore, but subsequently determined that the weapon also has potential for defending against missiles, which strengthened Navy interest in EMRG vdevelopment.[47]

The Navy is continuing development work on EMRG, but it is unclear when production-model EMRGs will be installed on Navy ships. The Navy's FY2021 budget submission requests $9.5 million in FY2021 for continued development of EMRG, but does not appear to program any additional development funding for EMRG in FY2022-FY2025.[48]

---

[43] Because it uses electricity rather than a powder charge to accelerate the projectile, Navy officials sometimes refer to EMRG as a launcher rather than a gun or cannon.

[44] Grace Jean, "With a Bang, Navy Begins Tests on EM Railgun Prototype Launcher," *Navy News Service*, February 28, 2012, accessed August 12, 2015, at http://www.navy.mil/submit/display.asp?story_id=65577.

[45] The speed of sound in air (i.e., Mach 1), varies with altitude; at sea level, it is approximately 761 miles an hour. See, for example, the table entitled "Speed of Sound at Different Altitudes," accessed August 12, 2015, at http://www.fighter-planes.com/jetmach1.htm.

[46] Unlike SSLs, however, EMRG is not a directed energy weapon, because it achieves its effects by firing a physical projectile at the target, not by directing electromagnetic energy at the target.

[47] For an article discussing the use of EMRG in countering ASCMs and ASBMs, see Sam LaGrone, "Navy Wants Rail Guns to Fight Ballistic and Supersonic Missiles Says RFI," *USNI News*, January 5, 2015. In response to Section 243 of the FY2012 National Defense Authorization Act (H.R. 1540/P.L. 112-81 of December 31, 2011), the Navy in September 2012 submitted to the congressional defense committees a report on the EMRG development effort. (U.S. Navy, *Electromagnetic Railgun System: Final Report to the Congressional Defense Committees*, August 2012, with cover letters dated September 18, 2012. For a press report discussing the Navy's report to Congress, see Dan Taylor, "Stackley: Navy Identifies Four Technical Hurdles To Railgun Development," *Inside the Navy*, November 19, 2012.)

[48] *Department of Defense Fiscal Year (FY) 2021 Budget Estimates, Navy, Justification Book Volume 1 of 5, Research, Development, Test & Evaluation, Navy*, February 2020, pp. 412, 414. See also Jared Keller, "The Navy's $500 Million Effort to Develop a Futuristic Railgun Is Going Nowhere Fast," *Task and Purpose*, April 24, 2020.

Following tests with early Navy-built EMRG prototypes, the Navy funded the development of two industry-built EMRG prototype demonstrators, one by BAE Systems and the other by General Atomics (see **Figure 13** and **Figure 14**).

Figure 13. Industry-Built EMRG Prototype Demonstrator

BAE prototype

Source: Navy photograph dated July 8, 2014, associated with Office of Naval Research Public Affairs, "From Research to Railgun: Revolutionary Weapon at Future Force EXPO," *Navy News Service*, January 13, 2015, accessed August 12, 2015, at http://www.navy.mil/submit/display.asp?story_id=85166.

The two industry-built prototypes are designed to fire projectiles at energy levels of 20 to 32 megajoules,[49] which is enough to propel a projectile 50 to 100 nautical miles.[50] (Such ranges might refer to using the EMRG for NSFS missions. Intercepts of missiles and UAVs might take place at much shorter ranges.) The Navy began evaluating the two industry-built prototypes in 2012.

A February 27, 2017, press report stated that

> a new full and open competition is in the works for the railgun. While the Office of Naval Research and several companies will continue their development of the railgun and projectile, [Naval Sea Systems Command spokeswoman Christianne] Witten said the program office is planning to hold a new competition for the technologies prior to them entering the engineering and manufacturing development phase of the acquisition process, known as "milestone B."

[49] The Navy states that "a megajoule is a measurement of energy associated with a mass traveling at a certain velocity. In simple terms, a one-ton vehicle moving at 100 mph equals a magajoule of energy." (Office of Naval Research Public Affairs, "Navy Sets New World Record with Electromagnetic Railgun Demonstration," *Navy News Service*, December 10, 2010, accessed August 12, 2015, at http://www.navy.mil/submit/display.asp?story_id=57690.)

[50] Grace Jean, "With a Bang, Navy Begins Tests on EM Railgun Prototype Launcher," *Navy News Service*, February 28, 2012, accessed August 12, 2015, at http://www.navy.mil/submit/display.asp?story_id=65577.

> "The railgun acquisition program will avoid being 'locked in' to proprietary solutions for key system components," Witten wrote. "It is the Navy's objective to leverage the industry competition that ONR initially held for the subsystems of pulse power, barrel technology maturation and projectiles. Another round of system full and open competition is planned at milestone B."[51]

Figure 14. Industry-Built EMRG Prototype Demonstrator

General Atomics prototype

Source: Navy photograph dated July 8, 2014, accessed August 12, 2015, at http://www.navy.mil/view_image.asp?id=180994.

A July 21, 2017, press report stated the following:

> The U.S. Office of Naval Research (ONR) is proceeding in its electromagnetic railgun research and expects to reach a capacity of 10 rounds per minute with a 32 Mega-Joule muzzle launch for each round, officials said Thursday [July 20].
>
> Dr. Thomas Beutner, department head of Code 35 in ONR's Naval Air Warfare and Weapons Department, told reporters that the railgun research is going well and has made several scientific advances....
>
> Tom Boucher, program officer at Code 35 said the ONR S&T program calls for a maturation of achieving 10 rounds per minute at 32 megajoules by fiscal year 2019. To reach that goal, ONR is building a series of barrels and incorporating lessons learned. They will achieve the full rep-rate and muzzle energy in 2018 and in 2019 demonstrate the longest life of a barrel at that muzzle energy.
>
> After reaching these goals the S&T portion of the program should be complete. Separately the Navy's Program Executive Office Integrated Warfare Systems (PEO IWS) will look at shipboard integration if the Navy decides to do that and that office will make any follow-on acquisition decisions, Boucher said....

[51] Justin Doubleday, "Laser, Railgun Programs Transitioned to Navy Acquisition Offices," *Inside the Navy*, February 27, 2017.

> ONR's rep-rate composite launcher, which can repeat launches quicker than other test devices, will be able to achieve the 10 round-per-minute rate the program seeks by later this summer. ONR plans to gradually ramp up this launcher to higher rep-rate and energy levels through the end of the year, Beutner said.
>
> He also talked about how ONR has demonstrated the ability to use pulse power, having fired 5,000 pulse shots. For the rep-rate firing, ONR has to use a larger energy farm or capacitor base resulting in pulse power using over one megajoule per cubic meter energy density.
>
> "That's an important scientific advance in terms of energy density in those capacitors, but even more important that's a size factor that will fit into the ships. Both crewed combatants and future combatants," Beutner said.[52]

A March 9, 2018, press report states the following:

> Following a flurry of reports in December predicting the Navy's $500 million electromagnetic railgun experiment was dead on arrival, the chief of Naval Operations told lawmakers this week that the death of the program was greatly exaggerated.
>
> "[We are] fully invested in railgun; we continue to test it," Adm. John Richardson told the House Appropriations subcommittee on defense during a Wednesday hearing on Navy and Marine Corps budget issues. "We've demonstrated it at lower firing rates and ... shorter ranges. Now we have to do the engineering to, sort of, crank it up and get it at the designated firing rates, at the 80- to 100-mile range."...
>
> Business Insider reported in December that the Pentagon's Strategic Capabilities office was shifting research efforts from the railgun, which uses electromagnetic energy to shoot large projectiles at speeds of up to 4,500 miles per hour, to broader high-velocity projectile study.
>
> The Navy has never acknowledged a loss of interest in railgun technology, however. Last July, officials with the Office of Naval Research told reporters that the power behind the gun would be increased to 32 megajoules over the summer, giving the weapon a range of 110 miles....
>
> While Richardson acknowledged the challenges and said Navy brass were "very conscious" of reported Chinese achievements in railgun technology,[53] he maintained the service was still invested in the program.[54]

---

[52] Richard Abott, "Navy Railgun research To Reach 10 Rounds Per Minute In 2018," *Defense Daily*, July 21, 2017. See also Hope Hodge Seck, "The Navy's Railgun Will Get Faster, More Powerful This Summer," *DefenseTech*, July 21, 2017; Patrick Tucker, "The US Navy's Railgun Breakthrough Could Change Energy Storage," *Defense One*, August 2, 2017.

[53] Press reports starting in late January 2018 stated that China is developing an electromagnetic railgun, and has installed what observers speculate may be a prototype version of such a weapon on a Chinese amphibious ship. See CRS Report RL33153, *China Naval Modernization: Implications for U.S. Navy Capabilities—Background and Issues for Congress*, by Ronald O'Rourke.

[54] Hope Hodge Seck, "Navy 'Fully Invested' in Futuristic Railgun, Top Officer Says," *Military.com*, March 9, 2018. See also Joseph Trevithick, "Depite What You've Heard, The Navy Isn't Ditching Its Railgun And Budget Docs Prove It," *The Drive*, February 14, 2018; Jared Keller, "The Navy's Electromagnetic Railgun Is Both Alive And Dead," *Task and Purpose*, February 16, 2018; Doug Tsuruoka, "The Navy Isn't Giving up on Its Deadly Railgun Yet," *National Interest*, February 22, 2018.

GLGP

Overview

As the Navy was developing EMRG, it realized that the guided projectile being developed for EMRG, which weighs about 23 pounds,[55] could also be fired from 5-inch and 155mm powder guns. When fired from EMRG, the projectile reaches hypervelocity (i.e., Mach 5+) speeds, and thus came to be known as the hypervelocity projectile (HVP).

When fired from a power gun, the projectile flies quickly, but not as quickly as it does when fired from EMRG. In addition, whereas the Navy's original concept was to use the EMRG projectile for both EMRG and powder guns—and might still decide to do that—the Navy now states that the high-speed projectile fired from powder guns might instead be a different projectile. For both of these reasons, the high-speed projectile for powder guns, which was originally called HVP, is now referred to by the Navy as the gun-launched guided projectile (GLGP).[56]

The Navy's FY2021 budget submission states that

> The Gun Launched Guided Projectile program leverages Hypervelocity Projectile (HVP) technology developed under each of the respective Strategic Capabilities Office (SCO) and Office of Naval Research (ONR) Future Naval Capabilities (FNC) programs to provide gun-based Anti-Ship Cruise Missile (ASCM) defense. Gun-based ASCM defense capability increases both ship's weapon capacity against ASCM raids and battle persistence in successive ASCM raids. The performance improvement is achieved without relying on Vertical Launch System (VLS) cells for weapon deployment. This effectively deepens the ship's magazine for raid defense and supports larger allocation of VLS cells to offensive capability. In addition to improved capacity and battle persistence, gun-based ASCM

[55] The Navy states that HVP weighs 23 pounds. Source: David Martin, "Navy's Newest Weapon Kills at Seven Times the Speed of Sound," *CBS News (cbsnews.com)*, April 7, 2014.

BAE Systems states that HVP is 24 inches long and weighs 28 pounds, including a 15-pound payload. The total length and weight of an HVP launch package, BAE Systems states, is 26 inches and 40 pounds. BAE states that the maximum rate of fire for HVP is 20 rounds per minute from a Mk 45 5-inch gun, 10 rounds per minute from the 155mm gun on DDG-1000 class destroyers (called the Advanced Gun System, or AGS), and 6 rounds per minute from EMRG. HVP's firing range, BAE Systems states, is more than 40 nautical miles (when fired from a Mk 45 Mod 2 5-inch gun), more than 50 nautical miles (Mk 45 Mod 4 5-inch gun), more than 70 nautical miles (155mm gun on DDG-1000 class destroyers), and more than 100 nautical miles (EMRG). (BAE Systems, "Hypervelocity Projectile (HVP)," 2014, accessed August 14, 2015, at http://www.baesystems.com/download/BAES_178505/hyper-velocity-projectile-hvp-datasheet.)

In July 2015, the Navy issued a request for information (RFI) to industry for the fabrication of a prototype EMRG mount capable of handling an integrated launch weight package of 22 kg, or about 48.5 pounds. (RFI for Fabrication of Prototype Mount for Naval Railgun, Solicitation Number: N00024-15-R-4132, FedBizOpps.gov, July 29, 2015. See also Justin Doubleday, "Navy Developing Integrated Mount For Electromagnetic Railgun," *Inside the Navy*, July 31, 2015.)

[56] The Navy states that

> The terms HVP and GLGP are both still used. Hyper Velocity Projectile (HVP) is the term used in the current development programs that [DOD's] SCO [Strategic Capabilities Office] and [Office of naval Research] ONR have ongoing with BAE Systems. Gun Launch Guided Projectile (GLGP) is the term that describes the future acquisition program and the associated performance specification that industry will compete for. GLGP is the RDT&E [research, development, test, and evaluation] budget program element [i.e., line item] covering all guided projectile development effort including HVP.
>
> (Navy Office of Legislative Affairs email to CRS, May 6, 2019.)

> defense solutions provide a cost effective response to an ASCM attack due to the unit cost of the projectile relative to missiles.
>
> The introduction of gun-based ASCM defense for large caliber guns is made possible by recent advancements in microelectronics, sensors, and energetic systems that enable precision guidance and tailored lethality. GLGP incorporates these HVP technologies into an aerodynamically streamlined sub-caliber airframe to achieve a highly maneuverable projectile. When launched from the MK 45 Gun Weapon System (GWS) at high velocities, GLGP's high maneuverability combined with high kinetic energy at the intercept yields effectiveness against ASCMs.[57]

As noted earlier, GLGP had an estimated unit procurement cost in 2018 of about $85,000.[58]

One advantage of GLGP is that the 5-inch and 155mm guns from which it would be fired are already installed on Navy cruisers and destroyers, creating a potential for rapidly proliferating GLGP through the cruiser-destroyer force, once development of GLGP is complete and the weapon has been integrated into cruiser and destroyer combat systems. Navy cruisers each have two 5-inch guns, and Navy Arleigh Burke (DDG-51) class destroyers each have one 5-inch gun.

Figure 15 and **Figure 16** show the then-named HVP. **Figure 17** shows launch packages for the then-named HVP configured for 5-inch guns, 155mm guns, and EMRG.

Figure 15. Photograph Showing HVP

Source: Navy photograph dated April 4, 2014, with a caption that reads in part: "Rear Adm. Matthew Klunder, chief of naval research, shows off a Hypervelocity Projectile (HVP) to CBS News reporter David Martin during an interview held at the Naval Research Laboratory's materials testing facility." Accessed August 12, 2015, at http://www.navy.mil/view_image.asp?id=174517.

[57] *Department of Defense Fiscal Year (FY) 2021 Budget Estimates, Navy, Justification Book Volume 2 of 5, Research, Development, Test & Evaluation, Navy*, February 2020, p. 972.

[58] Sydney J. Freedberg Jr., "$86,000 + 5,600 MPH = Hyper Velocity Missile Defense," *Breaking Defense*, January 26, 2018; Jared Keller, "The U.S. Military Has a New 'Bullet' That Attacks At Mach Six (with 100 Mile Range)," *National Interest*, February 3, 2018.

Figure 16. HVP

Source: Slide 7 from Navy briefing entitled "Electromagnetic Railgun," NDIA Joint Armaments Forum, Exhibition & Technology Demonstration, May 14, 2014, LCDR Jason Fox, USN, Assistant PM [Program Manager], Railgun Ship Integration, Distribution A, Approved for Public Release, accessed August 13, 2015, at http://www.dtic.mil/ndia/2014armaments/WedFox.pdf.

In September 2012, when the concept was to use the then-named HVP as a common projectile for both EMRG and powder guns (which might still happen), the Navy described the projectile as

> a next generation, common, low drag, guided projectile capable of completing multiple missions for gun systems such as the Navy 5-Inch, 155-mm, and future railguns. Types of missions performed will depend on gun system and platform. The program goal is to address mission requirements in the areas of Naval Surface Fire Support, Cruise Missile Defense, Anti-Surface Warfare, and other future Naval mission areas. Mission performance will vary from gun system, launcher, or ship. HVP's low drag aerodynamic design enables high velocity, maneuverability, and decreased time-to-target. These attributes coupled with accurate guidance electronics provide low cost mission effectiveness against current threats and the ability to adapt to air and surface threats of the future.
>
> The high velocity compact design relieves the need for a rocket motor to extend gun range. Firing smaller more accurate rounds improves danger close/collateral damage requirements and provides potential for deeper magazines and improved shipboard safety. Responsive wide area coverage can be achieved using HVP from conventional gun systems and future railgun systems.
>
> The modular design will allow HVP to be configured for multiple gun systems and to address different missions. The hypervelocity projectile is being designed to provide lethality and performance enhancements to current and future gun systems. A hypervelocity projectile for multiple systems will allow for future technology growth while reducing development, production, and total ownership costs.
>
> Research Challenges & Opportunities [include]:

—High acceleration tolerant electronic components

—Lightweight, high strength structural composites

—Miniature, high density electronic components

—Safe high energy propellants compatible with shipboard operations

—Aerothermal protection systems for flight vehicles[59]

Figure 17. HVP Launch Packages

Launch packages for 5-inch gun, 155mm gun, and EMRG

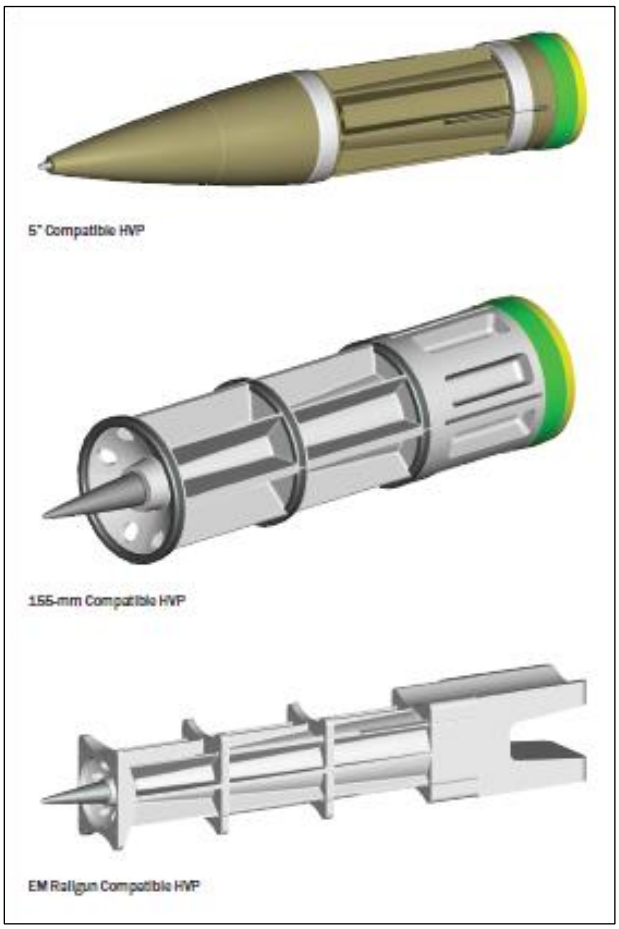

Source: BAE Systems, "Hypervelocity Projectile (HVP)," 2014, accessed August 14, 2015, at http://www.baesystems.com/download/BAES_178505/hyper-velocity-projectile—datasheet.

When fired from 5-inch powder guns, GLGP reportedly achieves a speed of roughly Mach 3, which is roughly half the speed it achieves when fired from EMRG, but more than twice the speed of a conventional 5-inch shell fired from a 5-inch gun.[60] This is apparently fast enough for countering at least some ASCMs. The Navy states that "The HVP—combined with the MK 45 [5-

[59] Office of Naval Research, "Hypervelocity Projectile," September 2012, accessed October 21, 2016, at http://www.onr.navy.mil/~/media/Files/Fact-Sheets/35/Hypervelocity-Projectile-2012B.ashx.

[60] Source: Sam LaGrone, "Updated: Navy Researching Firing Mach 3 Guided Round from Standard Deck Guns," *USNI News*, June 1, 2015 (updated June 2, 2015).

inch gun][61]—will support various mission areas including naval surface fire support, and has the capacity to expand to a variety of anti-air threats, [and] anti-surface [missions], and could expand the Navy's engagement options against current and emerging threats."[62]

A December 21, 2016, opinion column states the following:

> Now the Navy is acquiring rail guns that use such energy to fire 15- to 25-pound, 18-inch projectiles at 5,000 miles per hour. They hit with the impact of a train slamming into a wall at 100 miles per hour. The high-speed, hence high-energy projectiles, which cost just $25,000, can radically improve fleet-protection capabilities: A barrage of them could counter an enemy's more expensive anti-ship missiles.
>
> The daunting challenge posed by defense against the proliferating threat of ballistic missiles is that it is prohibitively expensive to be prepared to intercept a swarm of incoming missiles. New technologies, however, can revolutionize defense against ballistic missiles because small, smart projectiles can be inexpensive. It takes 300 seconds to pick up such a launched missile's signature, the missile must be tracked and a vector calculated for defensive projectiles. A single 25-pound projectile can dispense more than 500 three-gram tungsten impactors and be fired at hypervelocity by electromagnetic energy. Their impact force—their mass times the square of their velocity—can destroy expensive missiles and multiple warheads.[63]

Figure 18 is a slide showing the potential application of the then-named HVP to 5-inch power guns, 155mm powder guns, and EMRG.

The first line of the slide in **Figure 18**, for example, discusses then-named HVP's use with 5-inch powder guns, stating that it uses a high-explosive (HE) warhead for the NSFS mission;[64] that a total of 113 5-inch gun barrels are available in the fleet (which could be a reference to 22 cruisers with two guns each, and 69 destroyers with one gun each); and that as a game-changing capability, it is guided and can be used at ranges of up to 26 nautical miles to 41 nautical miles for NSFS operations, for countering ASCMs, and for anti-surface warfare (ASuW) operations (i.e., attacking surface ships and craft).

Figure 19 is a not-to-scale illustration of how then-named HVPs fired from EMRGs and 5-inch guns could be used to counter various targets, including ASCMs and ASBMs.

DOD Interest in GLGP

GLGP emerged as a program of particular interest to DOD, which has exploring the potential for using the weapon across multiple U.S. military services. An April 11, 2016, press report states the following:

> The Pentagon wants to take a weapon originally designed for offense, flip its punch for defense and demonstrate by 2018 the potential for the Army and Navy to conduct missile defense of bases, ports and ships using traditional field guns to fire a new hypervelocity round guided by a mobile, ground variant of an Air Force fighter aircraft radar.

---

[61] The type of 5-inch gun on Navy cruisers and destroyers is called the Mark 45.

[62] Naval Surface Warfare Center Dahlgren Division Corporate Communications, "DEPSECDEF Loads HVP on Test Range, Observes Repetitive Rate Electromagnetic Railgun's Commissioning Series," *Navy News Service*, May 8, 2015, accessed August 12, 2015, at http://www.navy.mil/submit/display.asp?story_id=86987.

[63] George F. Will, "Can Mattis Make Peace Through Technology?" *Washington Post*, December 21, 2016.

[64] The "KE" in the next line down means that when fired from EMRG, the projectile can alternatively attack targets using its own kinetic energy (i.e., by impacting the target at hypersonic speed).

> The Strategic Capabilities Office [SCO] is working with the Army, Navy and Air Force to craft a Hypervelocity Gun Weapon System that aims, in part, to provide China and Russia an example of a secret collection of new U.S. military capabilities the Defense Department is bringing online in an effort to strengthen conventional deterrence.
>
> "It is a fantastic program," Will Roper, [then-]Strategic Capabilities Office director, said in a March 28 interview with reporters, who said the project aims "to completely lower the cost of doing missile defense" by defeating missile raids at a lower cost per round and, as a consequence, imposing higher costs on attackers.[65]

Figure 18. HVP Application to Various Launchers

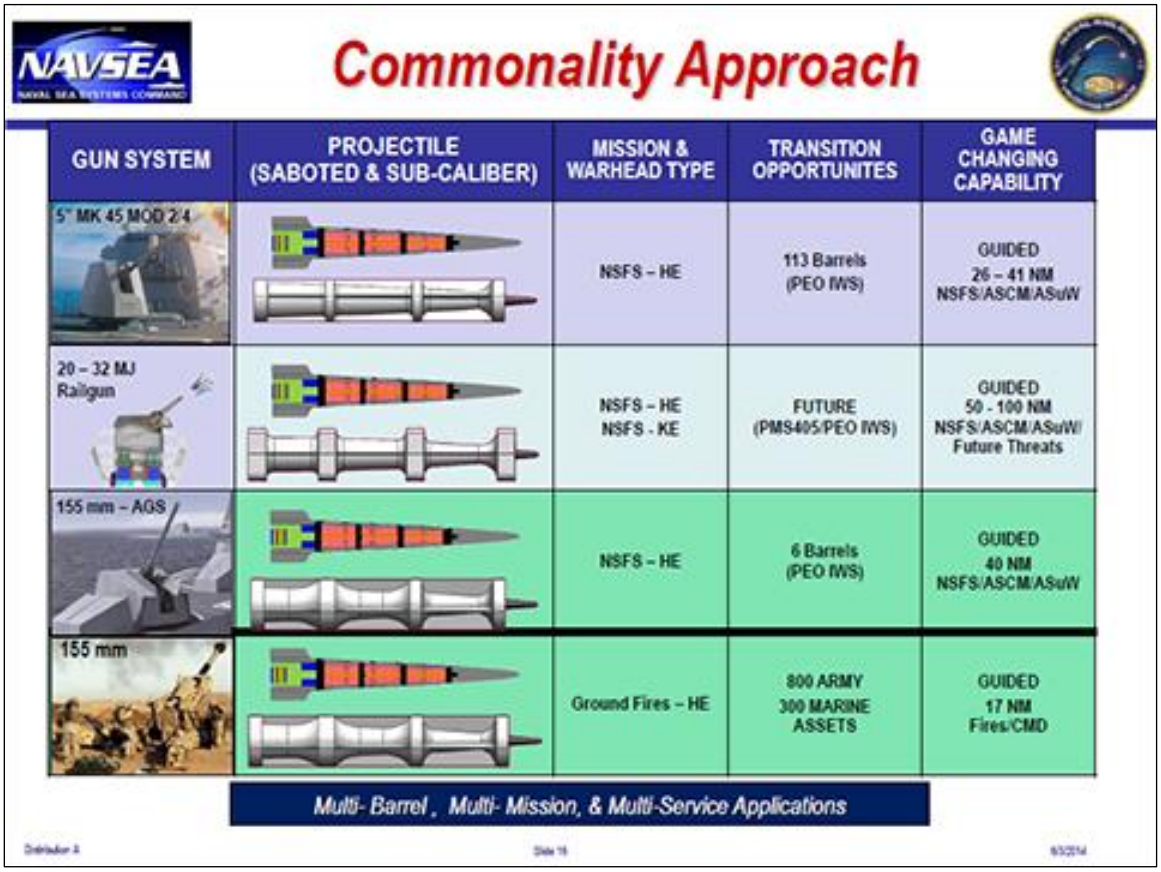

Source: Slide 16 from Navy briefing entitled "Electromagnetic Railgun," NDIA Joint Armaments Forum, Exhibition & Technology Demonstration, May 14, 2014, LCDR Jason Fox, USN, Assistant PM [Program Manager], Railgun Ship Integration, Distribution A, Approved for Public Release, accessed August 13, 2015, at http://www.dtic.mil/ndia/2014armaments/WedFox.pdf.

A May 2, 2016, press report states the following:

> "We thought rail guns were something we were really going to go after, but it turns out that powder guns firing the same hypervelocity projectiles gets you almost as much as you would get out of the electromagnetic rail gun, but it's something we can do much faster," [then-Deputy Secretary of Defense Robert] Work said. "We are going to say [to the next administration] 'Look, we believe this is the place where you want to put your money, but

[65] Jason Sherman, "SCO Aims To Flip The Script on Missile Defense With Hypervelocity Gun," *Inside the Navy*, April 11, 2016.

> we're going to have enough money in there for both the electromagnetic rail gun and the powder gun.' So if the new administration says 'No really the electromagnetic rail gun is the way I want to go,' knock yourself out, we've set you up for success."[66]

Figure 19. Navy Slide Depicting HVP Operations Against Various Target Types

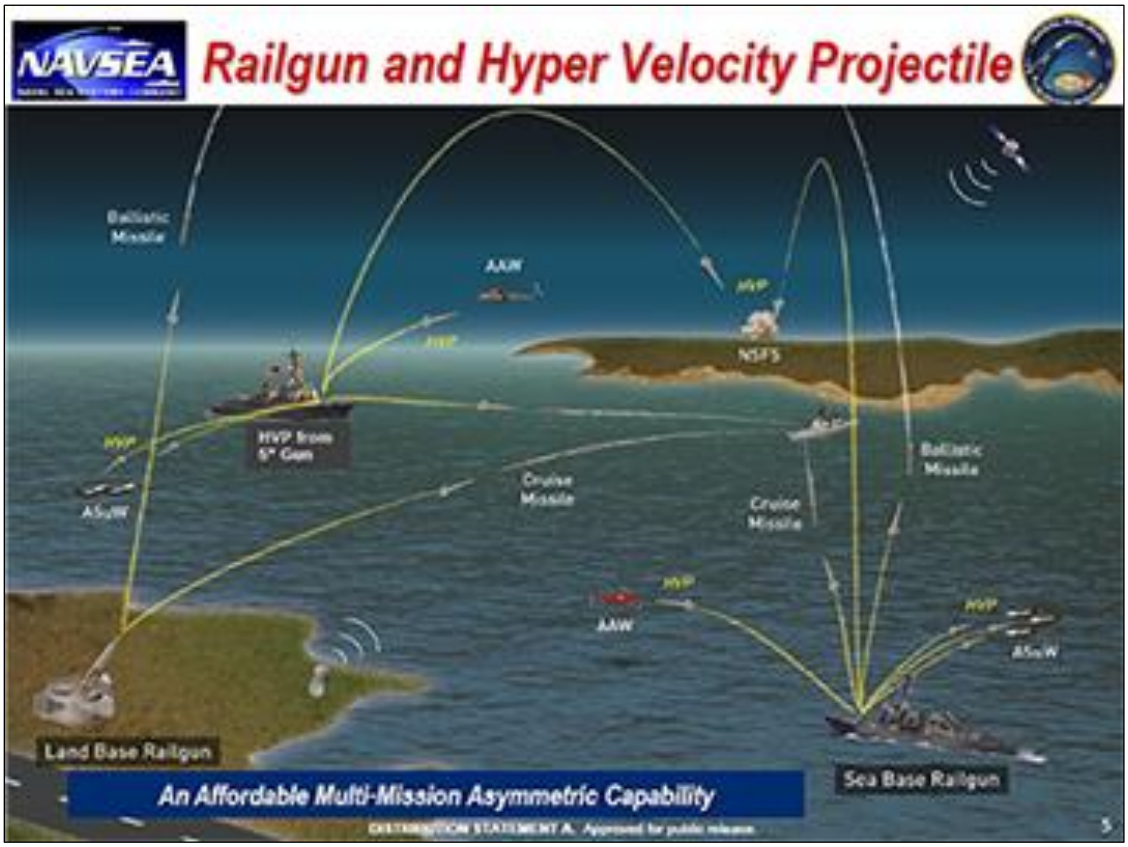

Source: Slide 5 from Navy briefing entitled "Electromagnetic Railgun," NDIA Joint Armaments Forum, Exhibition & Technology Demonstration, May 14, 2014, LCDR Jason Fox, USN, Assistant PM [Program Manager], Railgun Ship Integration, Distribution A, Approved for Public Release, accessed August 13, 2015, at http://www.dtic.mil/ndia/2014armaments/WedFox.pdf.

A May 5, 2016, press report similarly states the following:

> Come January [2017], the Pentagon will almost assuredly have new leadership, complete with a new vision for how the Department of Defense should operate, organize and plan for the future.
>
> It's a reality facing down [then-]Defense Secretary Ash Carter and [then-]Deputy Secretary Bob Work as they try to complete a transformation at the Pentagon, one which both men have said is vital to making sure the US is able to maintain its technological edge against great powers like Russia and China in the future....
>
> "One of the things we have done in our program is build in a lot of different options that they [i.e., officials in the next administration] can pull levers on," Work explained.
>
> As an example, he pointed to the idea of an electromagnetic railgun. Initially, Work and his team thought that was an area that would be a major focus of development, but as they experimented they realized that a powder gun with a hypervelocity round could have

[66] Scott Maucione, "DoD Is Setting Up the Third Offset for the Next President," *Federal News Radio*, May 2, 2016.

> almost the same impact—but at a fraction of the cost, because it did not require the development, testing and adaptation of a new gun.
>
> "We're going to say 'look, this is the place where [we think] you want to put your money,' but we're going to have enough money in both the electromagnetic railgun and the powder gun that if the new administration says 'I really want the electromagnetic railgun, this is the way I want to go,' knock yourself out," Work said. "We've set you up for success."[67]

A May 9, 2016, press report states the following:

> [Then-]Deputy Defense Secretary Bob Work said last week that current Pentagon leaders have made investments intended to position the next presidential administration to offset expected Russian and Chinese technological advancements, specifically highlighting lessons learned about a new hypervelocity gun.
>
> Work... said one of the key findings to emerge from the effort was the Hypervelocity Gun Weapon System, which he said could be poised to displace much of what the Defense Department had planned to invest in the Navy's electromagnetic rail gun.
>
> "We thought rail guns were going to be something we were really going to go after," he said, adding that "it turns out that powder guns" are capable of firing the same projectiles, at the same velocity, for far less cost.[68]

A July 18, 2016, press report states the following:

> The Pentagon's office tasked with tweaking existing and developing military technology for new uses is pushing development of ammo meant for the electromagnetic railgun for use in existing naval guns and artillery pieces....
>
> About year and a half ago, researchers at the Pentagon's Strategic Capabilities Office and inside the service realized that there was more short-term promise for not only the Navy but the Army to use the Hyper Velocity Projectiles (HVP) rounds overseen by the Office of Naval Research (ONR) in both services existing powder guns, said [then-]SCO [Strategic Capabilities Office] head William Roper said last week.
>
> "To me they were just interesting test articles a few years ago, but thanks to that service input and us funding some high-risk demonstration we now think that we can do pretty revolutionary things with existing powder guns—think howitzers, Paladins, the Navy's five-inch guns. We've shifted emphasis to that," Roper said during a Wednesday talk at the Center for Strategic and International Studies (CSIS).
>
> "Not that we're not interested in railgun—we are—but if you look at the delta between fielding in quantity—we have [more than] a 1,000 powder guns, we have very few railguns."...
>
> The SCO-led research effort will work to create HVP sensor and a fire control regime that will find its way eventually to the railgun project, Roper said.
>
> "So when the railgun is ready to field it will be able to just be dropped in place as a better launcher as opposed to being a great technology that we have to build a new architecture for," he said.

[67] Aaron Mehta, "Pentagon No. 2: How to Keep Third Offset Going in the Next Administration," *Defense News*, May 5, 2016.

[68] Tony Bertuca, "Work: New Hypervelocity Gun Could Displace Rail Gun in Next Administration," *Inside the Navy*, May 9, 2016.

> "We're going to take the bet and let's see if we can field this and let's completely flip the paradigm of missile defense."[69]

A September 19, 2016, press report states the following:

> After much deliberation, both public and private, the Pentagon, which has shifted emphasis away from the electromagnetic rail gun as a next-generation missile defense platform, sees a new hypervelocity powder gun technology as the key to demonstrating to potential adversaries like China and Russia that U.S. military units on land and sea can neutralize large missile salvos in future conflicts....
>
> "If you do that, you change every 155 [mm] howitzer in the U.S. Army in every NATO country into a cruise missile and tactical ballistic missile defender and, oh by the way, you extend their offensive range," [then-Deputy Secretary of Defense Robert] Work said.

The article states that Work "is pushing hard to lay the groundwork for the next presidential administration to conduct a military exercise called 'Raid Breaker' that would demonstrate the capabilities of the Hypervelocity Gun Weapon System program." It quotes him as stating that if DOD conducted such an exercise against 100 cruise missiles and ballistic missiles, "and were able to convince [potential adversaries] that we're able to knock down 95 to 98 of them, then that would have an enormous impact on the competition in the Pacific, on the competition in Europe and would [clearly] improve conventional deterrence." It further quotes him as stating that DOD's modeling shows that "if we can close the fire support with a controlled solution," the weapon would be able to shoot down most of a 100-missile raid.[70]

A May 19, 2017, press report states the following:

> An Army Howitzer is now firing a super high-speed, high-tech, electromagnetic Hyper Velocity Projectile, initially developed as a Navy weapon, an effort to fast-track increasing lethal and effective weapons to warzones and key strategic locations, Pentagon officials said.
>
> Overall, the Pentagon is accelerating developmental testing of its high-tech, long-range Electro-Magnetic Rail Gun by expanding the platforms from which it might fire and potentially postponing an upcoming at-sea demonstration of the weapon, Pentagon and Navy officials told Scout Warrior.
>
> While initially conceived of and developed for the Navy's emerging Rail Gun Weapon, the Pentagon and Army are now firing the Hyper Velocity Projectile from an Army Howitzer in order to potential harness near-term weapons ability, increase the scope, lethality and range ability to accelerate combat deployment of the lethal, high-speed round.[71]

A January 26, 2018, press report states the following:

> The Pentagon's Strategic Capabilities Office will test-fire a radical new missile defense system in less than a year....
>
> "That projectile is being designed to engage multiple threats," [Vincent Sabio, the HVP program manager at the Pentagon's Strategic Capabilities Office] said of the HVP. "There may be different modes that it operates in (in terms of) how does it maneuver, how does it close on the threat, and whether it engages a (explosive) warhead or whether it goes into a

[69] Sam LaGrone, "Pentagon: New Rounds For Old Guns Could Change Missile Defense for Navy, Army," *USNI News*, July 16, 2016 (updated July 19, 2016).

[70] Tony Bertuca, "DOD's New Hypervelocity Gun Technology Emerging As Key BMD Capability," *Inside the Navy*, September 19, 2016.

[71] Kris Osborn, "Pentagon to Accelerate Rail Gun Hypervelocity Projectile—Fires From Army Howitzer," *Scout Warrior*, May 19, 2017.

> hit-to-hill mode. Those will all be based on the threat, and we can tell it as it's en route to the threat, 'here's what you're going after, this is the mode you're going to engage in.'"...
>
> So when will the Army and Navy actually get Hyper Velocity Projectiles? Both services are already working with SCO to plan a handover of the program, Sabio said. His role is just to prove the key technology works: specifically, to demonstrate that an HVP can maneuver close enough to "an inbound, maneuvering threat" that it could have destroyed it if fitted with the proper warhead. Sabio's not developing that warhead.
>
> "We are building out the full fire control loop including the sensors, the coms links, the projectile, the launchers (i.e.) the guns," he said. "The command and control…. I leave that to my independent transition partners, Navy and Army."
>
> And by when will the demonstration happen? "Well," said Sabio, "my program ends less than a year from now."[72]

A January 8, 2019, press report states

> Last summer USS Dewey (DDG-105) fired 20 hyper velocity projectiles (HVP) from a standard Mk 45 5-inch deck gun in a quiet experiment that's set to add new utility to the weapon found on almost every U.S. warship, officials familiar with the test have told USNI News.
>
> The test, conducted by the Navy and the Pentagon's Strategic Capabilities Office as part of the Rim of the Pacific (RIMPAC) 2018 international exercise, was part of a series of studies to prove the Navy could turn the more than 40-year-old deck gun design into an effective and low-cost weapon against cruise missiles and larger unmanned aerial vehicles….
>
> While officials confirmed to USNI News that the RIMPAC test was unclassified, both the Office of the Secretary of Defense and the Office of Naval Research would not acknowledge the test when asked by USNI News.[73]

Remaining Development Challenges

Remaining development challenges for EMRG involve items relating to the gun itself (including increasing barrel life to desired levels), the projectile, the weapon's electrical power system, and the weapon's integration with the ship. Fielding GLGP on cruisers and destroyers equipped with 5-inch and 155mm powder guns would additionally require GLGP to be integrated with the combat systems of those ships. The Navy stated the following in 2017:

> The Railgun INP is in the second phase of a two-phase development effort. INP Phase I (FY 2005-2011) successfully advanced foundational enabling technologies and explored, through analysis and war gaming, the railgun's multi-mission utility. Launcher energy was increased by a factor of five to the system objective muzzle energy of 32 mega joules (110 nautical miles range) and barrel life was increased from tens of shots to hundreds of shots. Two contractors delivered tactical-style advanced containment launchers proving the feasibility of composite wound launchers. Pulsed power size was cut in half while thermal management for firing rate (rep-rate) was added to the design. INP Phase II focuses on increasing rep-rate capability. Rep-rate adds new levels of complexity to all of the railgun sub-systems, including thermal management, autoloader, and energy storage. A new test

[72] Sydney J. Freedberg Jr., "$86,000 + 5,600 MPH = Hyper Velocity Missile Defense," *Breaking Defense*, January 26, 2018. See also Yasmin, "Secretive Pentagon Office Share Details About Hypervelocity Missile Defense Weapon (Updated)," *National Defense*, January 26, 2018.

[73] Sam LaGrone, "Navy Quietly Fires 20 Hyper Velocity Projectiles Through Destroyer's Deckgun," *USNI News*, January 8, 2019.

> facility capable of supporting rep-rate testing at full energy level is coming on line at the Terminal Range at the Naval Surface Warfare Center, Dahlgren, Virginia. A new demonstration launcher (DL1) has been delivered and installed at the Terminal Range to commission the new facility. Additional rep-rate composite launchers (RCLs) capable of rep-rate are in various stages of design and fabrication. The Office of Naval Research will develop a tactical prototype railgun launcher and pulsed-power architecture suitable for advanced testing both afloat and ashore.[74]

A May 19, 2017, press report states the following:

> Consider 35 pounds of metal moving at Mach 5.8. Ten shots per minute. 1,000 shots before the barrel wears out under the enormous pressures. That's the devastating firepower the Navy railgun program aims to deliver in the next two years, and they're well on their way.
>
> "We continue to make great technical progress," said Office of Naval Research program manager Tom Boucher. Boucher and an aide briefed me in the blazing hot courtyard of the Pentagon, which was hosting the annual DoD Lab Day—a kind of military-grade science fair.
>
> Three years ago, then-Chief of Naval Operations Jonathan Greenert declared that railguns—which fire projectiles with electromagnetic pulses rather than gunpowder—had come so close to battle-ready that he wanted to test-fire one at sea. Since then the Navy has changed course, deciding that permanent land-based test sites would provide more and better data for fewer dollars than an ad hoc installation aboard a repurposed fast transport (variously known as JHSV or EFP). So on November 17, along the Potomac River at the Naval Surface Warfare Center in Dahlgren, Va., a new 32-megajoule railgun built by BAE Systems opened fire for the first time.... A second railgun is being set up at the Army's White Sands Missile Range in the New Mexico desert, where there's enough wide-open space to fire the weapon at its maximum range of more than a hundred nautical miles.
>
> While White Sands tests the long-range performance of the projectile, Dahlgren will work on the weapon itself. Previous test weapons were like medieval bombards, firing just a few times per day. The Dahlgren team is now making multiple shots per hour as they work out the bugs, and by the end of the year they expect to reach the goal of 10 shots per minute.
>
> Once they've reached the 10-round a minute rate, Dahlgren will switch focus to barrel life. A decade ago, experimental railguns often wore out their barrel with a single shot. With new materials better able to endure the intense stresses, the barrels on the current test weapons can last for hundreds of shots before requiring replacement—roughly how long a battleship's 16″ barrels lasted back in World War II. The goal is a barrel that lasts 1,000 rounds.[75]

Transitioning from Development to Procurement

Transitioning military technology efforts from the research and development phase to the procurement phase can sometimes be a challenge. Some military technology efforts fail to make the transition, falling into what observers sometimes refer to as the "valley of death" metaphorically located between the research and development phase and the procurement phase. A February 27, 2017, press report, for example, states that

> The Navy has established programs for high-energy lasers and the electromagnetic railgun at Naval Sea Systems Command acquisition directorates, paving the way for technologies that have long been stuck in research and development to potentially be installed on the service's ships one day.

[74] U.S. Navy, *U.S. Navy Program Guide 2017*, p. 169.

[75] Sydney J. Freedberg Jr., "Navy Railgun Ramps Up in Test Shots," *Breaking Defense*, May 19, 2017.

> The program executive office for integrated warfare systems (PEO IWS) is developing acquisition plans for lasers and the electromagnetic railgun, as well as the railgun's associated weapon, the hypervelocity projectile, according to NAVSEA spokeswoman Christianne Witten.
>
> Last August, a "Directed Energy Program Office" was set up at the above-water sensors directorate within PEO IWS, Witten wrote in a Feb. 22 email. The new office was established to "accelerate the fielding of High Energy Laser (HEL) weapon systems to the fleet," according to the spokeswoman.
>
> Additionally, last June, the Navy's acquisition executive charged the surface-ship weapons program office at PEO IWS with developing an acquisition and fielding plan for the railgun and the hypervelocity projectile, Witten said.[76]

Issues for Congress

Issues for Congress regarding SSLs, EMRG, and GLGP include the following:

- whether the Navy is moving too quickly, too slowly, or at about the right speed in its efforts to develop these weapons;
- the Navy's plans for transitioning these weapons from development to procurement and fielding of production models aboard Navy ships; and
- whether Navy the Navy's shipbuilding plans include ships with appropriate amounts of space, weight, electrical power, and cooling capacity to accommodate these weapons

Potential oversight questions for Congress include the following:

- Using currently available air-defense weapons, how well could Navy surface ships defend themselves in a combat scenario against an adversary such as China that has or could have large numbers of missiles and UAVs? How would this situation change if Navy surface ships in coming years were equipped with SSLs, EMRG, GLGP, or some combination of these systems?
- How significant are the remaining development challenges for SNLWS, EMRG, and GLGP? Are current schedules for developing SNLWS, EMRG, and GLGP appropriate in relation to remaining development challenges and projected improvements in enemy missiles?
- When does the Navy anticipate issuing roadmaps detailing its plans for procuring and installing production versions of SNLWS, EMRG, and GLGP on specific Navy ships by specific dates?
- Will the kinds of surface ships that the Navy plans to procure in coming years have sufficient space, weight, electrical power, and cooling capability to take full advantage of SSLs and EMRG? What changes, if any, would need to be made in Navy plans for procuring large surface combatants (i.e., destroyers and cruisers) or other Navy ships to take full advantage of SSLs and EMRGs?[77]

[76] Justin Doubleday, "Laser, Railgun Programs Transitioned to Navy Acquisition Offices," *Inside the Navy*, February 27, 2017.

[77] For a press report related to this issue, see Megan Eckstein, "Navy Making Room for Railguns in Next Warship, But No Extra Investments," *USNI News*, August 29, 2018.

- Given the Navy's interest in GLGP, how committed is the Navy to completing the development of EMRG and eventually deploying EMRGs on Navy ships?

Legislative Activity for FY2021

Summary of Congressional Action on FY2021 Funding

Table 1 summarizes congressional action on selected Navy FY2021 research and development account line items (known as program elements, or PEs) that related to SSLs, EMRG, and GLGP. These PEs do not necessarily capture all Navy research and development work related to these efforts—additional funding for these efforts may occur in other PEs that do not explicitly indicate that they include funding for these efforts.

Table 1. Summary of Congressional Action on FY2021 Funding

In millions of dollars, rounded to nearest tenth

		Authorization			Appropriation		
Program Element (PE) number, PE name, budget line number	**Req.**	**HASC**	**SASC**	**Conf.**	**HAC**	**SAC**	**Conf.**
SSL-TM							
PE 0603382N, Advanced Combat Systems Technology (Line 34), Project 2480, SSL-TM	11.9	11.9	11.9		11.9		
ODIN							
PE 0603925N, Directed Energy and Electric Weapon System (Line 74), Project 9823, Lasers for Navy application, ODIN	34.6	34.6*	34.6		34.6		
SNLWS Increment 1 (HELIOS)							
PE 0603925N, Directed Energy and Electric Weapon System (Line 74), Project 3402, Surface Navy Laser Weapon System (SNLWS)	56.3	56.3*	41.3		56.3		
HELCAP							
PE 0603925N, Directed Energy and Electric Weapon System (Line 74), Project 2731, High Energy Laser Counter ASCM Project (HELCAP)	38.0	38.0*	38.0		31.0		
PE 0603801N, Innovative Naval Prototypes (INP) Advanced Technology Development (Line 26), Project 2731, High Energy Laser Counter ASCM Project (HELCAP)	29.5	29.5	29.5		29.5		
****Line 74 Increase*** *(see narrative discussion of HASC report)*							
PE 0603925N, Directed Energy and Electric Weapon System (Line 74), Project 2731, increase for "One additional system"	0.0	88.0	0.0		0.0		
Line 74 Increase *(HAC report)*							
"Program increase—high energy laser system for counter-UAS [unmanned aerial system] area defense"	0.0	0.0	0.0		5.0		
EMRG							
PE 0603801N, Innovative Naval Prototypes (INP) Advanced Technology Development (Line 26), Project 2481, EMRG	9.5	29.5	9.5		29.5		
GLGP (HVP)							
PE 0603795N, Land Attack Technology (Line 71), Project 3401, Guided Projectile	6.2	6.2	6.2		6.2		

Source: Table prepared by CRS based on Navy FY2021 budget submission, committee and conference reports, and explanatory statements on FY2020 National Defense Authorization Act and FY2020 DOD Appropriations Act.

Notes: HASC is House Armed Services Committee; **SASC** is Senate Armed Services Committee; **HAC** is House Appropriations Committee; **SAC** is Senate Appropriations Committee; **Conf.** is conference agreement. These PEs do not necessarily capture all Navy research and development work related to shipboard lasers,

EMRG, and GLGP; additional funding for these efforts may occur in other PEs whose names and project titles do not explicitly indicate that they are for these efforts.

FY2021 National Defense Authorization Act (H.R. 6395/S. 4049)

House

The House Armed Services Committee, in its report (H.Rept. 116-442 of July 9, 2020) on H.R. 6395, recommended the funding levels shown in the HASC column of **Table 1**. The recommended increase of $88.0 million for line 74 is for "One additional system" (page 393), but it is not stated whether that additional system is ODIN, HELIOS, or HELCAP, all of which are funded through line 74, or something else. The recommended increase of $20 million for line 26 is for "Accelerated railgun technology maturation." (Page 391)

H.Rept. 116-442 also states:

> *Surface Navy Laser Weapon System Briefing*
>
> The Committee commends the Department of the Navy's recent success with the Laser Weapons System Demonstrator (LWSD) from an LPD. In addition, the Committee is encouraged that SNLWS Increment 1, the High Energy Laser with Integrated Optical-Dazzler and Surveillance (HELIOS) is on schedule to begin integration and land-based testing later this year. In addition, the Committee recognizes that both the Navy and industry have invested in this technology and understand the need to take incremental steps since there is no one-size fits all solution. However, the Committee is concerned with both the fragility of the supply base and that the protracted time between development, test and installation for an at-sea trial will cause the Navy to reprogram outyear funding to other needs. Therefore, the committee directs the Secretary of the Navy to brief the committee no later than October 1, 2020 on an updated acquisition timeline that illustrates its path forward on SNLWS Increment 1 and allows for an efficient fielding of SNLWS Increment 2. (Pages 47-48)

Senate

The Senate Armed Services Committee, in its report (S.Rept. 11-236 of June 24, 2020) on S. 4049, recommended the funding levels shown in the SASC column of column of **Table 1**. The recommended reduction of $15 million for HELIOS in line 74 is for "Excess engineering and sustainment support." (Page 507) Regarding this recommended reduction, S.Rept. 116-236 states:

> **Surface Navy Laser Weapon System**
>
> The budget request included $21.5 billion in Research, Development, Test, and Evaluation (RDT&E), Navy, of which $128.8 million was for PE 63925N directed energy and electric weapon systems.
>
> The committee notes excess engineering and sustainment support costs for the Surface Navy Laser Weapon System (project 3402).
>
> Accordingly, the committee recommends a decrease of $15.0 million, for a total of $113.8 million, in RDT&E, Navy, for PE 63925N. (Page 100)

FY2021 DOD Appropriations Act (H.R. 7617)

House

The House Appropriations Committee, in its report (H.Rept. 116-453 of July 16, 2020) on H.R. 7617, recommended the funding levels shown in the HAC column of **Table 1**. The recommended reduction of $6.95 million in line 74 for HELCAP is for "HELCAP concurrency." (Page 267) A recommended increase of $5.0 million in line 74 is for "Program increase—high energy laser system for counter-UAS [unmanned aerial system] area defense." (Page 267) The recommended increase of $20.0 million in line 26 for EMRG is for "Program increase—electromagnetic railgun." (Page 265)

H.Rept. 116-453 states:

> HIGH ENERGY LASER ENDLESS MAGAZINES
>
> The Committee notes the investments by the Department of Defense in directed energy systems capable of countering incoming threats, including the development of systems with endless or near endless magazines to ensure capability to counter salvos or swarms of any size.
>
> However, the Committee is concerned that while the Department of Defense has included reference to near endless magazines in its budget justification for high energy laser systems, it has not adequately defined the term in order to facilitate predictable requirements development or guide internal investment. Therefore, the Committee directs the Secretary of the Defense to submit a report to the congressional defense committees not later than 180 days after the enactment of this Act, which details capabilities, cost, and logistical implications of endless or near endless magazines. (Page 321)

Appendix. Potential Advantages and Limitations of Shipboard Lasers

This appendix presents additional information on potential advantages and limitations of shipboard lasers.

Potential Advantages

In addition to a low marginal cost per shot and deep magazine, potential advantages of shipboard lasers include the following:

- **Fast engagement times.** Light from a laser beam can reach a target almost instantly (eliminating the need to calculate an intercept course, as there is with interceptor missiles) and, by remaining focused on a particular spot on the target, cause disabling damage to the target within seconds. After disabling one target, a laser can be redirected in several seconds to another target.
- **Ability to counter radically maneuvering missiles.** Lasers can follow and maintain their beam on radically maneuvering missiles that might stress the maneuvering capabilities of Navy SAMs.
- **Precision engagements.** Lasers are precision-engagement weapons—the light spot from a laser, which might be several inches in diameter, affects what it hits, while generally not affecting (at least not directly) separate nearby objects.
- **Graduated responses.** Lasers can perform functions other than destroying targets, including detecting and monitoring targets and producing nonlethal effects, including reversible jamming of electro-optic (EO) sensors. Lasers offer the potential for graduated responses that range from warning targets to reversibly jamming their systems, to causing limited but not disabling damage (as a further warning), and then finally causing disabling damage.

Potential Limitations

Potential limitations of shipboard lasers include the following:

- **Line of sight.** Since laser light tends to fly through the atmosphere on an essentially straight path, shipboard lasers would be limited to line-of-sight engagements, and consequently could not counter over-the-horizon targets or targets that are obscured by intervening objects. This limits in particular potential engagement ranges against small boats, which can be obscured by higher waves, or low-flying targets. Even so, lasers can rapidly reacquire boats obscured by periodic swells.
- **Atmospheric absorption, scattering, and turbulence.** Substances in the atmosphere—particularly water vapor, but also things such as sand, dust, salt particles, smoke, and other air pollution—absorb and scatter light from a shipboard laser, and atmospheric turbulence can defocus a laser beam. These effects can reduce the effective range of a laser. Absorption by water vapor is a particular consideration for shipboard lasers because marine environments feature substantial amounts of water vapor in the air. There are certain wavelengths of light (i.e., “sweet spots” in the electromagnetic spectrum) where atmospheric absorption by water vapor is markedly reduced. Lasers can be

designed to emit light at or near those sweet spots, so as to maximize their potential effectiveness. Absorption generally grows with distance to target, making it in general less of a potential problem for short-range operations than for longer-range operations. Adaptive optics, which make rapid, fine adjustments to a laser beam on a continuous basis in response to observed turbulence, can counteract the effects of atmospheric turbulence. Even so, lasers might not work well, or at all, in rain or fog, preventing lasers from being an all-weather solution.

- **Thermal blooming.** A laser that continues firing in the same exact direction for a certain amount of time can heat up the air it is passing through, which in turn can defocus the laser beam, reducing its ability to disable the intended target. This effect, called thermal blooming, can make lasers less effective for countering targets that are coming straight at the ship, on a constant bearing (i.e., "down-the-throat" shots). Other ship self-defense systems, such as interceptor missiles or a CIWS, might be more suitable for countering such targets. Most tests of laser systems have been against crossing targets rather than "down-the-throat" shots. In general, thermal blooming becomes more of a concern as the power of the laser beam increases.
- **Saturation attacks.** Since a laser can attack only one target at a time, requires several seconds to disable it, and several more seconds to be redirected to the next target, a laser can disable only so many targets within a given period of time. This places an upper limit on the ability of an individual laser to deal with saturation attacks—attacks by multiple weapons that approach the ship simultaneously or within a few seconds of one another. This limitation can be mitigated by installing more than one laser on the ship, similar to how the Navy installs multiple CIWS systems on certain ships.
- **Hardened targets and countermeasures.** Less-powerful lasers—that is, lasers with beam powers measured in kilowatts (kW) rather than megawatts (MW)—can have less effectiveness against targets that incorporate shielding, ablative material, or highly reflective surfaces, or that rotate rapidly (so that the laser spot does not remain continuously on a single location on the target's surface) or tumble. Small boats (or other units) could employ smoke or other obscurants to reduce their susceptibility to laser attack.[78] Measures such as these, however, can increase the cost and/or weight of a weapon, and obscurants could make it more difficult for small boat operators to see what is around them, reducing their ability to use their boats effectively.

[78] See, for example, "Kelsey D. Atherton, "China Plans To Defeat American Lasers With Smoke," *Popular Science*, May 3, 2016.

- **Risk of collateral damage to aircraft, satellites, and human eyesight.** Since light from an upward-pointing laser that does not hit the target would continue flying upward in a straight line, it could pose a risk of causing unwanted collateral damage to aircraft and satellites. The light emitted by SSLs being developed by the Navy is of a frequency that can cause permanent damage to human eyesight, including blinding. Blinding can occur at ranges much greater than ranges for damaging targeted objects. Scattering of laser light off the target or off fog or particulates in the air can pose a risk to exposed eyes.[79]

For additional background information on potential Navy shipboard SSLs, see CRS Report R41526, *Navy Shipboard Lasers for Surface, Air, and Missile Defense: Background and Issues for Congress*, by Ronald O'Rourke.

Author Information

Ronald O'Rourke
Specialist in Naval Affairs

Disclaimer

This document was prepared by the Congressional Research Service (CRS). CRS serves as nonpartisan shared staff to congressional committees and Members of Congress. It operates solely at the behest of and under the direction of Congress. Information in a CRS Report should not be relied upon for purposes other than public understanding of information that has been provided by CRS to Members of Congress in connection with CRS's institutional role. CRS Reports, as a work of the United States Government, are not subject to copyright protection in the United States. Any CRS Report may be reproduced and distributed in its entirety without permission from CRS. However, as a CRS Report may include copyrighted images or material from a third party, you may need to obtain the permission of the copyright holder if you wish to copy or otherwise use copyrighted material.

[79] The United States in 1995 ratified the 1980 Convention on Prohibitions or Restriction on the Use of Certain Conventional Weapons Which May be Deemed to be Excessively Injurious or to Have Indiscriminate Effects. An international review of the convention began in 1994 and concluded in May 1996 with the adoption of, among other things, a new Protocol IV on blinding laser weapons. The protocol prohibits the employment of lasers that are specifically designed to cause permanent blindness to the naked eye or to the eye with corrective eyesight devices. The United States ratified Protocol IV on December 23, 2008, and it entered into force for the United States on July 21, 2009. DOD views the protocol as fully consistent with DOD policy. DOD believes the lasers discussed in this report are consistent with DOD policy of prohibiting the use of lasers specifically designed to cause permanent blindness to the naked eye or to the eye with corrective eyesight devices. For further discussion, see Appendix I ("Protocol on Blinding Lasers") in CRS Report R41526, *Navy Shipboard Lasers for Surface, Air, and Missile Defense: Background and Issues for Congress*, by Ronald O'Rourke.