Congressional Research Service
Informing the legislative debate since 1914

# Navy Lasers, Railgun, and Gun-Launched Guided Projectile: Background and Issues for Congress

Updated September 19, 2019

**Congressional Research Service**
https://crsreports.congress.gov
R44175

**CRS REPORT**
Prepared for Members and
Committees of Congress

# Summary

Three new ship-based weapons being developed by the Navy—solid state lasers (SSLs), the electromagnetic railgun (EMRG), and the gun-launched guided projectile (GLGP), also known as the hypervelocity projectile (HVP)—could substantially improve the ability of Navy surface ships to defend themselves against surface craft, unmanned aerial vehicles (UAVs), and eventually anti-ship cruise missiles (ASCMs).

The Navy has been developing SSLs for several years, and in 2014 installed on a Navy ship a prototype SSL called the Laser Weapon System (LaWS) that was capable of countering surface craft and UAVs. The Navy is now developing SSLs with improved capability for countering surface craft and UAVs, and eventually a capability for countering ASCMs. Navy efforts to develop these more capable lasers include

- the Solid State Laser Technology Maturation (SSL-TM) effort;
- the Ruggedized High Energy Laser (RHEL);
- the Optical Dazzling Interdictor, Navy (ODIN);
- the Surface Navy Laser Weapon System (SNLWS) Increment 1, also known as the high-energy laser with integrated optical dazzler and surveillance (HELIOS); and
- the High Energy Laser Counter-ASCM Program (HELCAP).

The Navy refers to the first four efforts above collectively as the Navy Laser Family of Systems (NFLoS). Under the Navy's laser development approach, NFLOS and HELCAP, along with technologies developed by other parts of DOD, are to support the development of future, more capable shipboard lasers.

The Navy has been developing EMRG for several years. It was originally conceived as a naval surface fire support (NSFS) weapon for supporting Marines and other friendly forces ashore. Subsequently, it was determined that ERGM could also be used for air and missile defense, which strengthened interest in ERGM development. More recently, it was determined that the projectile to be fired by ERGM could also be fired by existing powder-propellant guns, including 5-inch and 155 mm guns on Navy cruisers and destroyers, and 155 mm artillery guns operated by the Army and Marine Corps. When fired from power guns, the projectile does not fly as quickly as it does when fired from an ERGM, but it still flies quickly enough to be of use as an air-defense weapon. The concept of firing the projectile from powder guns is referred to as GLGP and HVP. One potential advantage of HVP/GLGP is that, once developed, it can be rapidly deployed on Navy cruisers and destroyers and in Army and Marine Corps artillery units, because the powder guns in question already exist.

In addition to the question of whether to approve, reject, or modify the Navy's FY2020 funding requests for SSLs, ERGM, and HVP/GLGP, issues for Congress include the following:

- whether the Navy is moving too quickly, too slowly, or at about the right speed in its efforts to develop these weapons;
- the Navy's plans for transitioning these weapons from development to procurement and fielding aboard Navy ships; and
- whether Navy the Navy's shipbuilding plans include ships with appropriate amounts of space, weight, electrical power, and cooling capacity to accommodate these weapons.

# Contents

Introduction ..... 1
Issue for Congress ..... 1
Scope of Report ..... 1
Background ..... 2
Strategic and Budgetary Context ..... 2
Concern About Survivability of Navy Surface Ships ..... 2
Depth of Magazine and Cost Exchange Ratio ..... 2
Navy Shipboard Lasers in Brief ..... 3
SSLs in General ..... 3
Earlier Developments Regarding Navy SSLs ..... 4
Current Navy SSL Development Efforts ..... 5
Summary of FY2020 Activities for SSL-TM, RHEL, and HELCAP ..... 11
Electromagnetic Railgun (EMRG) ..... 12
Gun-Launched Guided Projectile (GLGP) ..... 16
Remaining Development Challenges ..... 26
Solid-State Lasers (SSLs) ..... 26
EMRG and GLGP ..... 27
Transitioning from Development to Procurement ..... 28
Issues for Congress ..... 29
Potential Oversight Questions ..... 29
Legislative Activity for FY2020 ..... 29
Summary of Congressional Action on FY2020 Funding ..... 29
FY2020 National Defense Authorization Act (H.R. 2500/S. 1790) ..... 30
House ..... 30
Senate ..... 31
FY2020 DOD Appropriations Act (H.R. 2968/S. 2474) ..... 32
House ..... 32
Senate ..... 32

## Figures

Figure 1. Laser Weapon System (LaWS) on USS *Ponce* ..... 5
Figure 2. Laser Weapon System (LaWS) on USS *Ponce* ..... 6
Figure 3. Navy Laser Weapon Development Approach ..... 7
Figure 4. ONR Graphic of SSL-TM Laser System ..... 8
Figure 5. HELIOS System on DDG-51 Destroyer ..... 10
Figure 6. HELIOS System on DDG-51 Destroyer ..... 10
Figure 7. Summary of Selected FY2020 Laser Activities ..... 12
Figure 8. Industry-Built EMRG Prototype Demonstrator ..... 13
Figure 9. Industry-Built EMRG Prototype Demonstrator ..... 14
Figure 10. Photograph Showing HVP ..... 17
Figure 11. HVP ..... 18
Figure 12. HVP Launch Packages ..... 19

Figure 13. HVP Application to Various Launchers ..... 21
Figure 14. Navy Slide Depicting HVP Operations Against Various Target Types ..... 22

## Tables

Table 1. Summary of Congressional Action on FY2020 Funding..... 30

## Appendixes

Appendix. Potential Advantages and Limitations of Shipboard Lasers ..... 34

## Contacts

Author Information..... 37

# Introduction

## Issue for Congress

This report provides background information and issues for Congress on three new ship-based weapons being developed by the Navy—solid state lasers (SSLs), the electromagnetic railgun (EMRG),[1] and the gun-launched guided projectile (GLGP), also known as the hypervelocity projectile (HVP)—that could substantially improve the ability of Navy surface ships to defend themselves against surface craft, unmanned aerial vehicles (UAVs), and eventually anti-ship cruise missiles (ASCMs).

Any one of these three new weapons, if successfully developed and deployed, might be regarded as a "game changer" for defending Navy surface ships against enemy missiles and UAVs. If two or three of them are successfully developed and deployed, the result might be considered not just a game changer, but a revolution. Rarely has the Navy had so many potential new types of surface-ship air-defense weapons simultaneously available for development and potential deployment.

The issue for Congress is whether to approve, reject, or modify the Navy's acquisition strategies and funding requests for these three potential new weapons. Congress's decisions on this issue could affect future Navy capabilities and funding requirements and the defense industrial base.

This report supersedes an earlier CRS report that provided an introduction to potential Navy shipboard lasers.[2] Another CRS report provides an overview of the strategic and budgetary context in which the programs covered in this report, and other Navy programs, may be considered.[3]

## Scope of Report

High-energy lasers (HELs) and railguns are being developed by multiple parts of the Department of Defense (DOD), not just the Navy.[4] HELs, railguns, and GLGP have potential application to military aircraft and ground forces equipment, not just surface ships. And SSLs, EMRG, and GLGP could be used for performing missions other than defense against missiles, UAVs, and surface craft. In particular for the Navy and Marine Corps, EMRG could provide the Navy with a new naval surface fire support (NSFS) weapon for attacking land targets in support of Marines or other friendly ground forces ashore. This report focuses on Navy efforts to develop SSLs, EMRG, and GLGP for potential use in defending Navy surface ships against missiles and UAVs.

---

[1] Railgun is also spelled as rail gun; EMRG is also abbreviated as EM railgun.

[2] CRS Report R41526, *Navy Shipboard Lasers for Surface, Air, and Missile Defense: Background and Issues for Congress*, by Ronald O'Rourke. This earlier CRS report has been archived and remains available as a supplementary reference source on potential Navy shipboard lasers.

[3] CRS Report RL32665, *Navy Force Structure and Shipbuilding Plans: Background and Issues for Congress*, by Ronald O'Rourke. See also CRS Report R43838, *A Shift in the International Security Environment: Potential Implications for Defense—Issues for Congress*, by Ronald O'Rourke, and CRS Report R44891, *U.S. Role in the World: Background and Issues for Congress*, by Ronald O'Rourke and Michael Moodie.

[4] For a discussion of Army laser development programs, see CRS Report R45098, *U.S. Army Weapons-Related Directed Energy (DE) Programs: Background and Potential Issues for Congress*, by Andrew Feickert.

# Background

## Strategic and Budgetary Context

### Concern About Survivability of Navy Surface Ships

Although Navy surface ships have a number of means for defending themselves against missiles and UAVs,[5] some observers are concerned about the survivability of Navy surface ships in potential combat situations against adversaries, such as China, that are armed with large numbers of missiles, including advanced models, and large numbers of UAVs.[6] Concern about this issue has led some observers to conclude that the Navy's surface fleet in coming years might need to avoid operating in waters that are within range of these weapons, or that the Navy might need to move toward a different and more distributed fleet architecture that relies less on larger surface ships and more on smaller surface ships, unmanned vehicles, and submarines.[7] Perspectives on whether it would be cost effective to spend money on the procurement and operation of larger surface ships might be influenced by views on whether such ships can adequately defend themselves against enemy missiles and UAVs.

### Depth of Magazine and Cost Exchange Ratio

Two key limitations that Navy surface ships currently have in defending themselves against missiles and UAVs are limited depth of magazine and unfavorable cost exchange ratios. Limited depth of magazine refers to the fact that Navy surface ships can use surface-to-air missiles (SAMs) and their Close-in Weapon System (CIWS) Gatling guns to shoot down only a certain number of enemy missiles and UAVs before running out of SAMs and CIWS ammunition[8]—a situation (sometimes called "going Winchester") that can require a ship to withdraw from battle,

[5] These include the following: operating ships in ways that make it hard for others to detect and accurately track Navy ships; jamming or destroying enemy targeting sensors; interfering with the transmission of targeting data from sensors to weapon launchers; attacking missile launchers (which can be land-based launchers, ships, submarines, or aircraft); and countering missiles and UAVs headed toward Navy ships. Navy measures for countering missiles and UAVs headed toward Navy ships include the following: jamming a missile's or UAV's sensor or guidance system; using decoys of various kinds to lure enemy missiles away from Navy ships; and shooting down enemy missiles and UAVs with surface-to-air missiles and the Phalanx Close-In Weapon System (CIWS), which is essentially a radar-controlled Gatling gun. Employing all these measures reflects a long-standing Navy approach of creating a multi-layered defense against enemy missiles, and of attacking the enemy's "kill chain" at multiple points so as to increase the chances of breaking the chain. (The kill chain is the sequence of steps that an enemy must complete to conduct a successful missile attack on a Navy ship. Interfering with any step in the sequence can break the kill chain and thereby prevent or defeat the attack.)

[6] For more on China's anti-ship missiles and UAVs, see CRS Report RL33153, *China Naval Modernization: Implications for U.S. Navy Capabilities—Background and Issues for Congress*, by Ronald O'Rourke. Enemy missiles are not the only reasons that some observers are concerned about the future survivability of U.S. Navy surface ships in combat situations; observers are also concerned about threats to U.S. Navy surface ships posed by small boats, mines, and torpedoes.

[7] For additional discussion, see CRS Report RL32665, *Navy Force Structure and Shipbuilding Plans: Background and Issues for Congress*, by Ronald O'Rourke.

[8] Navy cruisers have 122 missile cells; Navy destroyers have 90 or 96 missile cells. Some of these cells are used for storing and launching Tomahawk land attack cruise missiles or anti-submarine rockets. The remainder are available for storing and launching SAMs. A Navy cruiser or destroyer might thus be armed with a few dozen or several dozen SAMs for countering missiles and UAVs. Countering missiles and UAVs with SAMs might sometimes require shooting two SAMs at each enemy missile.

spend time travelling to a safe reloading location (which can be hundreds of miles away),[9] and then spend more time traveling back to the battle area.

Unfavorable cost exchange ratios refer to the fact that a SAM used to shoot down a missile or UAV can cost the Navy more (perhaps much more) to procure than it cost the adversary to build or acquire the missile or UAV. Procurement costs for Navy air-defense missiles range from several hundred thousand dollars per mission to a few million dollars per missile, depending on the type. In combat scenarios against an adversary with a limited number of missiles or UAVs, an unfavorable cost exchange ratio can be acceptable because it saves the lives of Navy sailors and prevents very expensive damage to Navy ships. But in combat scenarios (or an ongoing military capabilities competition) against a country such as China that has many missiles and UAVs and a capacity for building or acquiring many more, an unfavorable cost exchange ratio can become a very expensive—and potentially unaffordable—approach to defending Navy surface ships against missiles and UAVs, particularly in a context of constraints on U.S. defense spending and competing demands for finite U.S. defense funds.

SSLs, EMRG, and GLGP offer a potential for dramatically improving depth of magazine and the cost exchange ratio:

- **Depth of magazine.** SSLs are electrically powered, drawing their power from the ship's overall electrical supply, and can be fired over and over, indefinitely, as long as the laser continues to work and the ship has fuel to generate electricity. EMRG projectiles and GLGPs can be stored by the hundreds in a Navy surface ship's weapon magazine.
- **Cost exchange ratio.** An SSL can be fired for a marginal cost of less than one dollar per shot (which is the cost of the fuel needed to generate the electricity used in the shot), while GLGP reportedly had an estimated unit procurement cost in 2018 of about $85,000.[10]

High-energy SSLs that have enough beam power to counter small boats and UAVs, but not enough to counter missiles, could nevertheless indirectly improve a ship's ability to counter missiles by permitting the ship to use fewer of its SAMs for countering UAVs, and more of them for countering missiles. Similarly, even though GLGPs fired from 5-inch powder guns might not be able to counter anti-ship ballistic missiles (ASBMs), they could indirectly improve a ship's ability to counter ASBMs by permitting the ship to use fewer of its SAMs for countering ASCMs and more of its SAMs for countering ASBMs.

# Navy Shipboard Lasers in Brief

## SSLs in General

The Navy in recent years has leveraged both significant advancements in industrial SSLs and decades of research and development work on military lasers done by other parts of DOD to

[9] The missile cells on a Navy cruiser or destroyers are clustered together in an installation called a Vertical Launch System (VLS). VLS cells cannot be reloaded while the ship is underway; a ship needs to return to a port or a calm anchorage to reload its VLS.

[10] Sources for cost figure for GLGP: Sydney J. Freedberg Jr., "$86,000 + 5,600 MPH = Hyper Velocity Missile Defense," *Breaking Defense*, January 26, 2018; Jared Keller, "The U.S. Military Has a New 'Bullet' That Attacks At Mach Six (with 100 Mile Range)," *National Interest*, February 3, 2018.

make substantial progress toward deploying high-energy SSLs on Navy surface ships.[11] Navy surface ships would use high-energy SSLs initially for jamming or confusing (i.e., "dazzling") intelligence, surveillance, and reconnaissance (ISR) sensors, for countering small boats and UAVs, and potentially in the future for countering enemy missiles as well. High-energy SSLs on Navy ships would generally be short-range defensive weapons—they would generally counter targets at ranges of about one mile to perhaps eventually a few miles.

In addition to a low marginal cost per shot and deep magazine, potential advantages of shipboard lasers include fast engagement times, an ability to counter radically maneuvering missiles, an ability to conduct precision engagements, and an ability to use lasers for graduated responses ranging from detecting and monitoring targets to causing disabling damage. Potential limitations of shipboard lasers relate to line of sight; atmospheric absorption, scattering, and turbulence (which prevent shipboard lasers from being all-weather weapons); an effect known as thermal blooming that can reduce laser effectiveness; countering saturation attacks; possible adversary use of hardened targets and countermeasures; and risk of collateral damage, including damage to aircraft and satellites and permanent damage to human eyesight, including blinding. These potential advantages and limitations are discussed in greater detail in the **Appendix**.

## Earlier Developments Regarding Navy SSLs

Earlier developments in the Navy's efforts to develop high-energy SSLs include the following:

- Between 2009 and 2012, the Navy successfully tested a prototype SSL called the Laser Weapon System (LaWS) against UAVs in a series of engagements that took place initially on land and subsequently on a Navy ship at sea. LaWS had a reported beam power of 30 kilowatts (kW).[12]
- Between 2010 and 2011, the Navy tested another prototype SSL called the Maritime Laser Demonstration (MLD) in a series of tests that culminated with an MLD installed on a Navy ship successfully engaging a small boat.
- In August 2014, the Navy installed LaWS on the USS *Ponce* (pronounced pon-SAY)—a converted amphibious ship that operated in the Persian Gulf as an interim Afloat Forward Staging Base (AFSB[I])[13]—to conduct evaluation of shipboard lasers in an operational setting against swarming boats and swarming UAVs (**Figure 1** and **Figure 2**).
- In December 2014, the Navy declared LaWS on the *Ponce* to be an "operational" system.[14] *Ponce* remained in the Persian Gulf until it was relieved in September

[11] In discussions of potential Navy shipboard lasers, a high-energy laser is generally considered to be a laser with a beam power of at least 10 kilowatts (kW). In addition to developing SLs, the Navy has also performed research and development work on a different kind of laser, called the free electron laser (FEL). For background information on the FEL, see CRS Report R41526, *Navy Shipboard Lasers for Surface, Air, and Missile Defense: Background and Issues for Congress*, by Ronald O'Rourke.

[12] See, for example, Mike McCarthy, "Navy Authorized To Use Ship-Based Laser In Battle," *Defense Daily*, December 11, 2014: 3.

[13] As an interim AFSB, *Ponce* operated in the Persian Gulf as a "mother ship" for Navy helicopter and small boat operations. Ships referred to as AFSBs are now referred to as Expeditionary Sea Base ships (ESBs).

[14] Mike McCarthy, "Navy Authorized To Use Ship-Based Laser In Battle," *Defense Daily*, December 11, 2014: 3; Sam LaGrone, "U.S. Navy Allowed to Use Persian Gulf Laser for Defense," *USNI News*, December 10, 2014; Philip Ewing, "Navy Declares Laser Weapon 'Operational,'" *Politico Pro (Pro Defense Report)*, December 10, 2014; Statement of Rear Admiral Mathias W. Winter, United States Navy, Chief of Naval Research, Before the Emerging Threats and Capabilities Subcommittee of the House Armed Services Committee on The Fiscal Year 2017 Budget Request,

2017 by its replacement, the new-construction Expeditionary Sea Base ship *Lewis B. Puller* (ESB-3). *Ponce* returned to the United States and was decommissioned in October 2017, at which point LaWS was removed from Ponce. LaWS is to be refurbished to serve as a land-based test asset for the HELIOS effort discussed below.[15]

**Figure 1. Laser Weapon System (LaWS) on USS *Ponce***

**Source:** Navy photograph dated November 16, 2014, accompanying David Smalley, "Historic Leap: Navy Shipboard Laser Operates in Arabian Gulf," *Navy News Service*, December 10, 2014, accessed August 12, 2015, at http://www.navy.mil/list_all.asp?id=84805.

## Current Navy SSL Development Efforts

The Navy is now developing SSLs with improved capability for countering surface craft and UAVs, and eventually a capability for countering ASCMs. Navy efforts to develop these more capable lasers include

- the Solid State Laser Technology Maturation (SSL-TM) effort;
- the Ruggedized High Energy Laser (RHEL);
- the Optical Dazzling Interdictor, Navy (ODIN);

February 24, 2016, p. 15.

[15] Source: Navy briefing to CRS and the Congressional Budget Office (CBO) on SNLWS program, April 27, 2018. For additional discussion of LaWS, see U.S. Navy, *U.S. Navy Program Guide 2017*, pp. 180-181, which refers to LaWS as the SSL-QRC (solid state laser—quick reaction capability).

- the Surface Navy Laser Weapon System (SNLWS) Increment 1, also known as the high-energy laser with integrated optical dazzler and surveillance (HELIOS); and
- the High Energy Laser Counter-ASCM Program (HELCAP).

**Figure 2. Laser Weapon System (LaWS) on USS *Ponce***

**Source:** Navy photograph dated November 17, 2014, accompanying David Smalley, "Historic Leap: Navy Shipboard Laser Operates in Arabian Gulf," *Navy News Service*, December 10, 2014, accessed August 12, 2015, at http://www.navy.mil/list_all.asp?id=84805.

As shown in **Figure 3**, the Navy refers to the first four efforts above collectively as the Navy Laser Family of Systems (NFLoS).[16] As also shown in **Figure 3**, under the Navy's laser development approach, NFLOS and HELCAP, along with technologies developed by other parts of DOD, are to support the development of future, more capable lasers referred to as SNLWS Increment 2 and SNLWS Increment 3. The Navy's FY2020 budget submission states that "HELCAP will leverage the knowledge gained in the Navy Laser Family of Systems (NLFoS) efforts…. This leveraged knowledge and new HELCAP technical solutions to the C-ASCM problem will enable a fully informed decision to rapidly field an integrated, fleet ready, HEL Weapon."[17]

### *SSL-TM*

As a follow-on effort to LaWS and MLD, the Navy initiated the SSL Technology Maturation (SSL-TM) program, in which industry teams led by BAE Systems, Northrop Grumman, and Raytheon, among others, competed to develop a shipboard laser with a beam power of up to 150 kW, which would provide increased effectiveness against small boats and UAVs. Technology developed in the SSL-TM effort will support development of the SNLWS Increment 2 system.

[16] See, for example, *Department of Defense, Fiscal Year (FY) 2020 Budget Estimates, Navy, Justification Book Volume 2 of 5, Research, Development, Test & Evaluation, Navy, Budget Activity 4*, pp. 1007-1008.

[17] See, for example, Department of Defense, Fiscal Year (FY) 2020 Budget Estimates, Navy, Justification Book Volume 2 of 5, Research, Development, Test & Evaluation, Navy, Budget Activity 4, pp. 1007-1008.

**Figure 3. Navy Laser Weapon Development Approach**

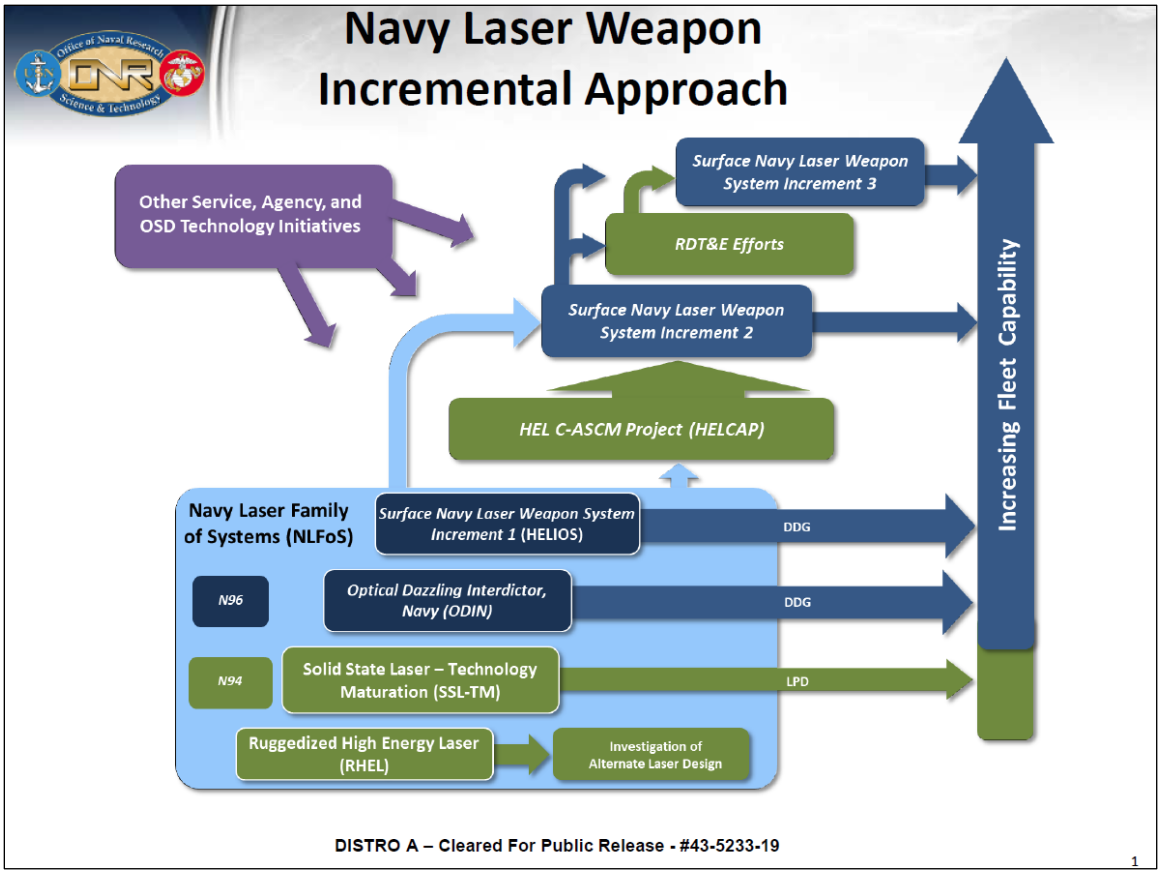


**Source:** Navy briefing slide provided by Navy Office of Legislative Affairs to CRS on May 6, 2019.

On October 22, 2015, DOD announced that it had selected Northrop Grumman as the winner of the SSL-TM competition.[18] **Figure 4** is an Office of Naval Research (ONR) graphic illustration of the SSL-TM system and its components as installed on the Navy's Self Defense Test Ship (the ex-USS *Paul F. Foster* [DD-964], an old Spruance [DD-963] class destroyer).[19] In January 2018, the Navy announced that it intended to install the SSL-TM laser on the newly built amphibious ship USS *Portland* (LPD-27).[20] Sea testing of SSL-TM on the *Portland* is scheduled for the fourth quarter of FY2019.[21]

[18] DOD contract award announcements for October 22, 2015, accessed December 18, 2015, at http://www.defense.gov/News/Contracts/Contract-View/Article/625630. See also "US Navy Selects Northrop Grumman to Design and Produce Shipboard Laser Weapon System Demonstrator," December 22, 2015, accessed March 18, 2016, at http://www.globenewswire.com/newsarchive/noc/press/pages/news_releases.html?d=10158731. See also Richard Scott, "Northrop Grumman To Build on MLD for SSL Demonstrator," *IHS Jane's International Defence Review*, February 2016: 5; Michael Fabey and Kris Osborn, "Navy to Fire 150Kw Ship Laser Weapon From Destroyers, Carriers," *Scout Warrior*, January 23, 2017.

[19] For additional discussion of SSL-TM, see U.S. Navy, *U.S. Navy Program Guide 2017*, pp. 180-181.

[20] Megan Eckstein, "LPD Portland Will Host ONR Laser Weapon Demonstrator, Serve as RIMPAC 2018 Flagship," *USNI News*, January 10, 2018; Richard Abott, "Next Navy Amphib Will Feature Laser Weapon Demo, Chosen As Flagship For RIMPAC 2018," *Defense Daily*, January 11, 2018.

[21] See, for example, Rich Abott, "150 kW LaWS Follow-On Laser Going On Portland Later This Year," *Defense Daily*, April 26, 2019; Geoff Ziezulewicz, "Pew! Pew! Pew! Laser-Armed Warships No Longer Science Fiction," *Navy*

**Figure 4. ONR Graphic of SSL-TM Laser System**

Artist's rendering

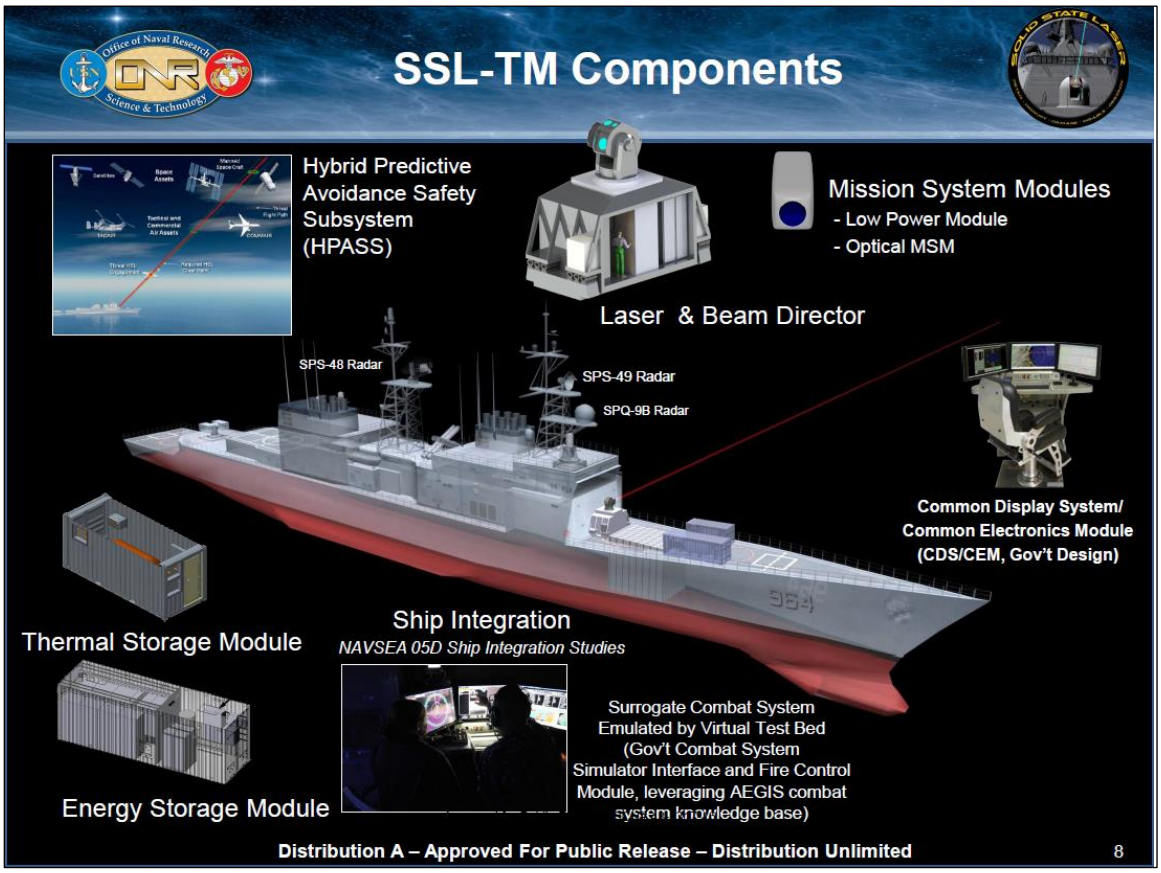


**Source:** Slide from February 2016 ONR briefing to CRS on SSL-TM program, received from Navy Office of Legislative Affairs February 26, 2016.

## *RHEL*

RHEL reportedly is "a 150-kilowatt laser that will apparently employ 'different laser architectures' that will handle more powerful laser beams eventually."[22] The Navy's FY2020 budget submission states that Budget Activity 3 development (i.e., advanced technology development) associated with RHEL was completed in FY2019;[23] that HELCAP, discussed below, was previously known as RHEL Phase II;[24] and that HELCAP will leverage, among other things, "Alternative Laser Sources for higher powers, also known as the Ruggedized High Energy

*Times*, May 6, 2019; Megan Eckstein, "Navy to Field High-Energy Laser Weapon, Laser Dazzler on Ships This Year as Development Continues," *USNI News*, May 30, 2019.

[22] Kyle Mizokami, "The U.S. Navy Is Funding Lasers and Killing the Railgun (Corrected)," *Popular Mechanics*, February 15, 2018. See also Brian Wang, "US Defense Pushing for Megawatt Class Lasers," *Next Big Future*, April 25, 2018.

[23] *Department of Defense, Fiscal Year (FY) 2020 Budget Estimates, Navy Justification Book Volume 1 of 5, Research, Development, Test & Evaluation, Navy, Budget Activities 1, 2, and 3*, March 2019, p. 375.

[24] *Department of Defense, Fiscal Year (FY) 2020 Budget Estimates, Navy Justification Book Volume 1 of 5, Research, Development, Test & Evaluation, Navy, Budget Activities 1, 2, and 3*, March 2019, p. 376.

Laser (RHEL) activities."[25] Congress added about $11.6 million in development funding for RHEL in FY2018; the funding was used for "long lead procurement for the beam director required to support integrated laser weapons system testing, mission analysis, lethality and defeat of anti-ship cruise missile threats."[26]

### *SNLWS Increment 1 (HELIOS)*

SNLWS Increment 1 is called HELIOS, an acronym meaning high energy laser with integrated optical dazzler and surveillance. The HELIOS effort is focused on rapid development and rapid fielding of a 60 kW-class high-energy laser (with growth potential to 150 kW) and dazzler in an integrated weapon system, for use in countering UAVs, small boats, and ISR sensors, and for combat identification and battle damage assessment.

Following a full and open competition based on a request for proposals (RFP) released on June 18, 2017, the Navy on January 26, 2018, awarded Lockheed Martin a $150 million contract for the development, manufacture, and delivery of two HELIOS systems—one for installation on a Navy Arleigh Burke (DDG-51) class Aegis destroyer, the other for land-based testing—by FY2020.[27] The contract includes options for up to 14 additional HELIOS systems that if exercised could increase the total value of the contract to $942.8 million.[28] **Figure 5** and **Figure 6** show an artist's renderings of HELIOS installed on a DDG-51.

A March 21, 2019, press report states

> The Navy is planning to install the High Energy Laser and Integrated Optical-dazzler with Surveillance (HELIOS) directed energy (DE) system on a DDG-51 Flight IIA destroyer by FY 2021 as it learns how to integrate laser weapons on its ships, a top official said Wednesday [March 20].
>
> Rear Adm. Ron Boxall, director of Navy Surface Warfare, called characterized the Navy's plans to integrate directed energy weapons as "yes we are going to burn the boats if you will, and move forward with this technology."
>
> Boxall said the Navy plans to install a HELIOS system on a West Coast DDG-51 in 2021. "It's already POM'ed in there to do that,[29] hopefully a West Coast destroyer in '21, onboard. We'll be testing it and then putting it aboard the ship."
>
> The Lockheed Martin [LMT] HELIOS will consist of a 60-150 kW single laser beam that can target unmanned aircraft systems (UAS) and small boats. The HELIOS is expected to be integrated on to a destroyer for its lifetime.

---

[25] *Department of Defense, Fiscal Year (FY) 2020 Budget Estimates, Navy, Justification Book Volume 2 of 5, Research, Development, Test & Evaluation, Navy, Budget Activity 4*, p. 1007.

[26] *Department of Defense, Fiscal Year (FY) 2020 Budget Estimates, Navy Justification Book Volume 1 of 5, Research, Development, Test & Evaluation, Navy, Budget Activities 1, 2, and 3*, March 2019, p. 381.

[27] See DOD contract awards for January 26, 2018 (Release No: CR-017-18, January 26, 2018); "Lockheed Gets $150m Contract to Install High Energy Laser on a Flight IIA DDG-51 destroyer," *NavalToday.com*, January 29, 2018; Kimberly Underwood, "Navy Selects Lockheed Martin to Deliver Laser Energy Weapon," *Signal*, January 30, 2018; Richard Scott, "Lockheed Martin to Develop HELIOS Laser Weapon for DDG 51 Flight IIA Destroyer," *Jane's Navy International*, January 30, 2018; "Lockheed Martin Receives $150 Million Contract to Deliver Integrated High Energy Laser Weapon Systems to U.S. Navy," Lockheed Martin, March 1, 2018; Sydney J. Freedberg Jr., "First Combat Laser For Navy Warship: Lockheed HELIOS," *Breaking Defense*, March 1, 2018; Jeff Hecht, "Lockheed Martin to Develop Laser Weapons for U.S. Navy Destroyers," *IEEE Spectrum*, March 2, 2018; Justin Bachman, "The Navy Wants a Laser to Blow Drones Out of the Sky," March 2, 2018.

[28] Richard Abott, "HELIOS Laser To Be First Fully Integrated On U.S. Ship," *Defense Daily*, March 5 2018: 10-12.

[29] This means that the installation has already been included in the Program Objective memorandum, an internal DOD document that is used to guide the preparation of the next proposed budget that DOD will submit to Congress.

**Figure 5. HELIOS System on DDG-51 Destroyer**

Artist's rendering

**Source:** Lockheed Martin image taken from "Lockheed Martin Receives $150 Million Contract to Deliver Integrated High Energy Laser Weapon Systems to U.S. Navy," Lockheed Martin, March 1, 2018.

**Figure 6. HELIOS System on DDG-51 Destroyer**

Detail from artist's rendering

**Source:** Detail from Lockheed Martin image taken from "Lockheed Martin Receives $150 Million Contract to Deliver Integrated High Energy Laser Weapon Systems to U.S. Navy," Lockheed Martin, March 1, 2018.

> The weapon will also feed intelligence, surveillance and reconnaissance (ISR) data into the ship's combat system and provide a counter-UAS (C-UAS) ISR dazzler capability. The dazzler uses a lower power setting to confuse or reduce ISR capabilities of a hostile UAS.
>
> Boxall said he is confident increased DE power outputs will come, but he is not yet confident in integrating them into existing combat systems.
>
> "Because if I'm going to burn the boats, I'm going to replace something that I have on ships today doing that mission with these weapons. And if I do that, I've got to be confident that it's going to work and it's going to cover those missions."
>
> He added that if a ship has a new DE laser weapon that will both sense and kill targets, "then I have to make sure it integrates with the other things that I have on my ship that can sense and kill—namely the Aegis weapon system. And so to me the most important aspect of the integrated laser is its integration into my existing combat system, period."
>
> While Boxall is confident the Navy can continue to increase laser weapon power on ship, one major limiting factor is power margin.
>
> The first HELIOS going on a destroyer will go on a Flight IIA ship, but the Flight III as a downside that it uses almost the same hull but focuses more power generation on the new AN/SPY-6 Air and Missile Defense Radar (AMDR). The AMDR will better detect air and missile threats, but "we are out of schlitz with regard to power. We used a lot of power for that and we don't have as much" extra for additional functions.
>
> Boxall said to get a HELIOS on a DDG-51 Flight III, the Navy will have to either remove something or look at "very aggressive power management." This is part of the calculus in the successor to the DDG-51, the Large Surface Combatant (LSC)….
>
> Last year, the Navy awarded Lockheed Martin a $150 million contract to develop two HELIOS systems in early 2018, with one to integrate on a DDG-51 and one for land-based testing….
>
> However, the FY '19 defense authorization bill restricted the Navy to only one HELIOS per fiscal year without first receiving a detailed contracting and acquisition strategy report.
>
> The HELIOS will not merely be bolted on the ship, but integrated into its Aegis combat system to direct the DE weapon….
>
> More recently, in January Lockheed Martin officials said they plan to put HELIOS through a production design review in 2019….[30]

## Summary of FY2020 Activities for SSL-TM, RHEL, and HELCAP

**Figure 7** shows a summary of the Navy's proposed FY2020 activities for SSL-TM, RHEL, and HELCAP.

[30] Rich Abott, "Navy To 'Burn The Boats' With Laser For Destroyer In 2021, Needs Bugger LSC For Lasers," *Defense Daily*, March 21, 2019. See also Sam LaGrone, "Navy Ready to 'Burn the Boats' with 2021 Laser Installation on a Destroyer," *USNI News*, March 20, 2019; Kyle Mizokami, "The Navy Plans to Put HELIOS Laser Weapon on Destroyer by 2021," *Popular Mechanics*, March 21, 2019; Justin Katz, "HELIOS Set for Critical Design Review in 2020, Delivery in May 2021," *Inside Defense*, May 2, 2019; Marc Selinger, "US Navy Tweaks Destroyer-Based Laser Effort," *Shephard Media*, May 8, 2019.

**Figure 7. Summary of Selected FY2020 Laser Activities**

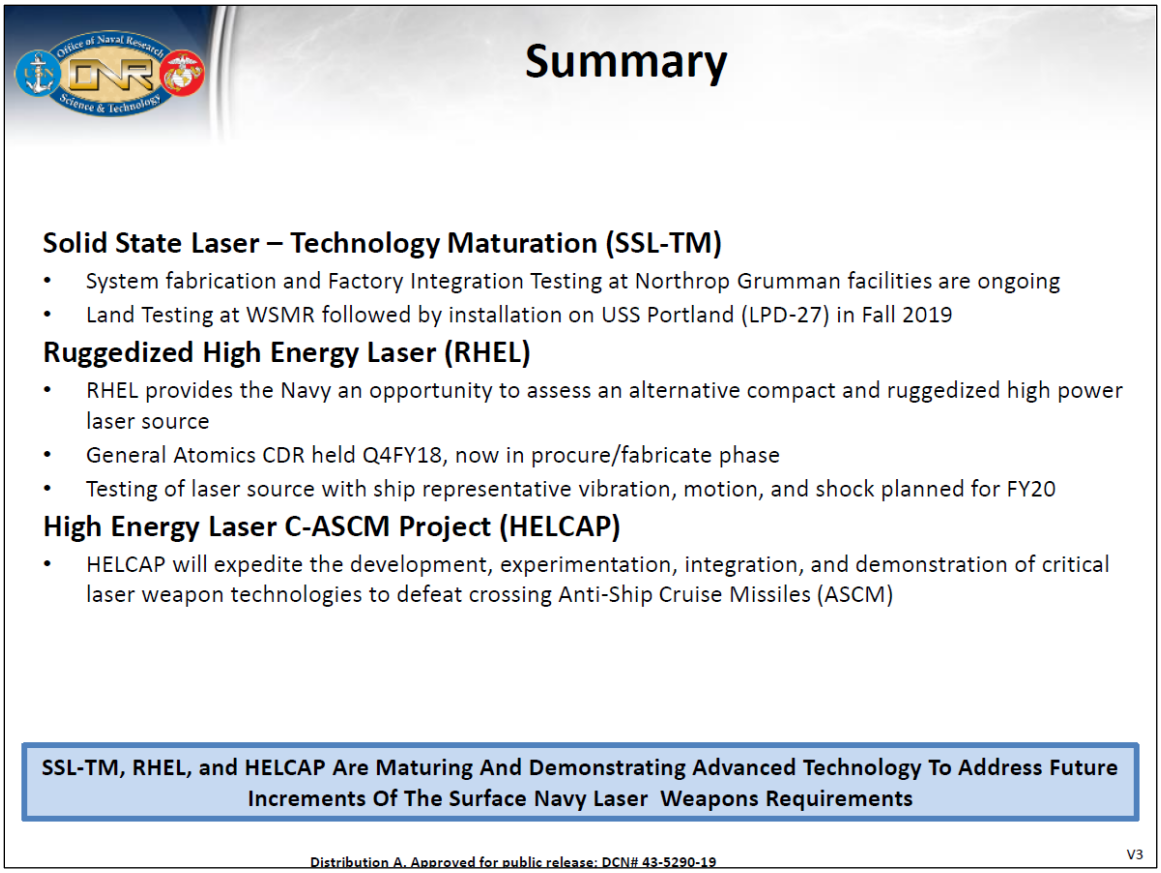


**Source:** Navy briefing slide provided by Navy Office of Legislative Affairs to CRS on May 7, 2019.

## Electromagnetic Railgun (EMRG)

The Navy since 2005 has been developing EMRG, a cannon that uses electricity rather than chemical propellants (i.e., gunpowder charges) to fire a projectile.[31] In EMRG, "magnetic fields created by high electrical currents accelerate a sliding metal conductor, or armature, between two rails to launch projectiles at [speeds of] 4,500 mph to 5,600 mph,"[32] or roughly Mach 5.9 to Mach 7.4 at sea level.[33] Like SSLs, EMRG draws its power from the ship's overall electrical supply.[34] The Navy originally began developing EMRG as a naval surface fire support (NSFS) weapon for

[31] Because it uses electricity rather than a powder charge to accelerate the projectile, Navy officials sometimes refer to EMRG as a launcher rather than a gun or cannon.

[32] Grace Jean, "With a Bang, Navy Begins Tests on EM Railgun Prototype Launcher," Navy News Service, February 28, 2012, accessed August 12, 2015, at http://www.navy.mil/submit/display.asp?story_id=65577.

[33] The speed of sound in air (i.e., Mach 1), varies with altitude; at sea level, it is approximately 761 miles an hour. See, for example, the table entitled "Speed of Sound at Different Altitudes," accessed August 12, 2015, at http://www.fighter-planes.com/jetmach1.htm.

[34] Unlike SSLs, however, EMRG is not a directed energy weapon, because it achieves its effects by firing a physical projectile at the target, not by directing electromagnetic energy at the target.

supporting U.S. Marines operating ashore, but subsequently determined that the weapon also has potential for defending against missiles.[35]

Following tests with early Navy-built EMRG prototypes, the Navy funded the development of two industry-built EMRG prototype demonstrators, one by BAE Systems and the other by General Atomics (see **Figure 8** and **Figure 9**).

**Figure 8. Industry-Built EMRG Prototype Demonstrator**

BAE prototype

**Source:** Navy photograph dated July 8, 2014, associated with Office of Naval Research Public Affairs, "From Research to Railgun: Revolutionary Weapon at Future Force EXPO," *Navy News Service*, January 13, 2015, accessed August 12, 2015, at http://www.navy.mil/submit/display.asp?story_id=85166.

The two industry-built prototypes are designed to fire projectiles at energy levels of 20 to 32 megajoules,[36] which is enough to propel a projectile 50 to 100 nautical miles.[37] (Such ranges

[35] For an article discussing the use of EMRG in countering ASCMs and ASBMs, see Sam LaGrone, "Navy Wants Rail Guns to Fight Ballistic and Supersonic Missiles Says RFI," *USNI News*, January 5, 2015. In response to Section 243 of the FY2012 National Defense Authorization Act (H.R. 1540/P.L. 112-81 of December 31, 2011), the Navy in September 2012 submitted to the congressional defense committees a report on the EMRG development effort. (U.S. Navy, *Electromagnetic Railgun System: Final Report to the Congressional Defense Committees*, August 2012, with cover letters dated September 18, 2012. For a press report discussing the Navy's report to Congress, see Dan Taylor, "Stackley: Navy Identifies Four Technical Hurdles To Railgun Development," *Inside the Navy*, November 19, 2012.)

[36] The Navy states that "a megajoule is a measurement of energy associated with a mass traveling at a certain velocity. In simple terms, a one-ton vehicle moving at 100 mph equals a magajoule of energy." (Office of Naval Research Public Affairs, "Navy Sets New World Record with Electromagnetic Railgun Demonstration," *Navy News Service*, December 10, 2010, accessed August 12, 2015, at http://www.navy.mil/submit/display.asp?story_id=57690.)

[37] Grace Jean, "With a Bang, Navy Begins Tests on EM Railgun Prototype Launcher," Navy News Service, February 28, 2012, accessed August 12, 2015, at http://www.navy.mil/submit/display.asp?story_id=65577.

might refer to using the EMRG for NSFS missions. Intercepts of missiles and UAVs might take place at much shorter ranges.) The Navy began evaluating the two industry-built prototypes in 2012.

**Figure 9. Industry-Built EMRG Prototype Demonstrator**

General Atomics prototype

**Source:** Navy photograph dated July 8, 2014, accessed August 12, 2015, at http://www.navy.mil/view_image.asp?id=180994.

A February 27, 2017, press report stated that

> a new full and open competition is in the works for the railgun. While the Office of Naval Research and several companies will continue their development of the railgun and projectile, [Naval Sea Systems Command spokeswoman Christianne] Witten said the program office is planning to hold a new competition for the technologies prior to them entering the engineering and manufacturing development phase of the acquisition process, known as "milestone B."
>
> "The railgun acquisition program will avoid being 'locked in' to proprietary solutions for key system components," Witten wrote. "It is the Navy's objective to leverage the industry competition that ONR initially held for the subsystems of pulse power, barrel technology maturation and projectiles. Another round of system full and open competition is planned at milestone B."[38]

A July 21, 2017, press report stated the following:

> The U.S. Office of Naval Research (ONR) is proceeding in its electromagnetic railgun research and expects to reach a capacity of 10 rounds per minute with a 32 Mega-Joule muzzle launch for each round, officials said Thursday [July 20].
>
> Dr. Thomas Beutner, department head of Code 35 in ONR's Naval Air Warfare and Weapons Department, told reporters that the railgun research is going well and has made several scientific advances....

[38] Justin Doubleday, "Laser, Railgun Programs Transitioned to Navy Acquisition Offices," *Inside the Navy*, February 27, 2017.

> Tom Boucher, program officer at Code 35 said the ONR S&T program calls for a maturation of achieving 10 rounds per minute at 32 megajoules by fiscal year 2019. To reach that goal, ONR is building a series of barrels and incorporating lessons learned. They will achieve the full rep-rate and muzzle energy in 2018 and in 2019 demonstrate the longest life of a barrel at that muzzle energy.
>
> After reaching these goals the S&T portion of the program should be complete. Separately the Navy's Program Executive Office Integrated Warfare Systems (PEO IWS) will look at shipboard integration if the Navy decides to do that and that office will make any follow-on acquisition decisions, Boucher said....
>
> ONR's rep-rate composite launcher, which can repeat launches quicker than other test devices, will be able to achieve the 10 round-per-minute rate the program seeks by later this summer. ONR plans to gradually ramp up this launcher to higher rep-rate and energy levels through the end of the year, Beutner said.
>
> He also talked about how ONR has demonstrated the ability to use pulse power, having fired 5,000 pulse shots. For the rep-rate firing, ONR has to use a larger energy farm or capacitor base resulting in pulse power using over one megajoule per cubic meter energy density.
>
> "That's an important scientific advance in terms of energy density in those capacitors, but even more important that's a size factor that will fit into the ships. Both crewed combatants and future combatants," Beutner said.[39]

A March 9, 2018, press report states the following:

> Following a flurry of reports in December predicting the Navy's $500 million electromagnetic railgun experiment was dead on arrival, the chief of Naval Operations told lawmakers this week that the death of the program was greatly exaggerated.
>
> "[We are] fully invested in railgun; we continue to test it," Adm. John Richardson told the House Appropriations subcommittee on defense during a Wednesday hearing on Navy and Marine Corps budget issues. "We've demonstrated it at lower firing rates and ... shorter ranges. Now we have to do the engineering to, sort of, crank it up and get it at the designated firing rates, at the 80- to 100-mile range."...
>
> Business Insider reported in December that the Pentagon's Strategic Capabilities office was shifting research efforts from the railgun, which uses electromagnetic energy to shoot large projectiles at speeds of up to 4,500 miles per hour, to broader high-velocity projectile study.
>
> The Navy has never acknowledged a loss of interest in railgun technology, however. Last July, officials with the Office of Naval Research told reporters that the power behind the gun would be increased to 32 megajoules over the summer, giving the weapon a range of 110 miles....

[39] Richard Abott, "Navy Railgun research To Reach 10 Rounds Per Minute In 2018," *Defense Daily*, July 21, 2017. See also Hope Hodge Seck, "The Navy's Railgun Will Get Faster, More Powerful This Summer," *DefenseTech*, July 21, 2017; Patrick Tucker, "The US Navy's Railgun Breakthrough Could Change Energy Storage," *Defense One*, August 2, 2017.

> While Richardson acknowledged the challenges and said Navy brass were "very conscious" of reported Chinese achievements in railgun technology,[40] he maintained the service was still invested in the program.[41]

## Gun-Launched Guided Projectile (GLGP)

As the Navy was developing EMRG, it realized that the guided projectile being developed for EMRG, which weighs about 23 pounds,[42] could also be fired from 5-inch and 155mm powder guns. When fired from EMRG, the projectile reaches hypervelocity (i.e., Mach 5+) speeds, and thus came to be known as the hypervelocity projectile (HVP). When fired from a power gun, the projectile flies quickly, but not as quickly as it does when fired from EMRG. In addition, whereas the Navy's original concept was to use the EMRG projectile for both EMRG and powder guns—and might still decide to do that—the Navy now states that the high-speed projectile fired from powder guns might instead be a different projectile. For both of these reasons, the high-speed projectile for powder guns, which was originally called HVP, is now referred to by the Navy as the gun-launched guided projectile (GLGP). The Navy states that

> The terms HVP and GLGP are both still used. Hyper Velocity Projectile (HVP) is the term used in the current development programs that [DOD's] SCO [Strategic Capabilities Office] and [Office of naval Research] ONR have ongoing with BAE Systems. Gun Launch Guided Projectile (GLGP) is the term that describes the future acquisition program and the associated performance specification that industry will compete for. GLGP is the RDT&E [research, development, test, and evaluation] budget program element [i.e., line item] covering all guided projectile development effort including HVP.[43]

---

[40] Press reports starting in late January 2018 stated that China is developing an electromagnetic railgun, and has installed what observers speculate may be a prototype version of such a weapon on a Chinese amphibious ship. See CRS Report RL33153, *China Naval Modernization: Implications for U.S. Navy Capabilities—Background and Issues for Congress*, by Ronald O'Rourke.

[41] Hope Hodge Seck, "Navy 'Fully Invested' in Futuristic Railgun, Top Officer Says," *Military.com*, March 9, 2018. See also Joseph Trevithick, "Depite What You've Heard, The Navy Isn't Ditching Its Railgun And Budget Docs Prove It," *The Drive*, February 14, 2018; Jared Keller, "The Navy's Electromagnetic Railgun Is Both Alive And Dead," *Task and Purpose*, February 16, 2018; Doug Tsuruoka, "The Navy Isn't Giving up on Its Deadly Railgun Yet," *National Interest*, February 22, 2018.

[42] The Navy states that HVP weighs 23 pounds. Source: David Martin, "Navy's Newest Weapon Kills at Seven Times the Speed of Sound," *CBS News (cbssnews.com)*, April 7, 2014.

BAE Systems states that HVP is 24 inches long and weighs 28 pounds, including a 15-pound payload. The total length and weight of an HVP launch package, BAE Systems states, is 26 inches and 40 pounds. BAE states that the maximum rate of fire for HVP is 20 rounds per minute from a Mk 45 5-inch gun, 10 rounds per minute from the 155mm gun on DDG-1000 class destroyers (called the Advanced Gun System, or AGS), and 6 rounds per minute from EMRG. HVP's firing range, BAE Systems states, is more than 40 nautical miles (when fired from a Mk 45 Mod 2 5-inch gun), more than 50 nautical miles (Mk 45 Mod 4 5-inch gun), more than 70 nautical miles (155mm gun on DDG-1000 class destroyers), and more than 100 nautical miles (EMRG). (BAE Systems, "Hypervelocity Projectile (HVP)," 2014, accessed August 14, 2015, at http://www.baesystems.com/download/BAES_178505/hyper-velocity-projectile-hvp-datasheet.)

In July 2015, the Navy issued a request for information (RFI) to industry for the fabrication of a prototype EMRG mount capable of handling an integrated launch weight package of 22 kg, or about 48.5 pounds. (RFI for Fabrication of Prototype Mount for Naval Railgun, Solicitation Number: N00024-15-R-4132, FedBizOpps.gov, July 29, 2015. See also Justin Doubleday, "Navy Developing Integrated Mount For Electromagnetic Railgun," *Inside the Navy*, July 31, 2015.)

[43] Navy Office of Legislative Affairs email to CRS, May 6, 2019.

As noted earlier, GLGP had an estimated unit procurement cost in 2018 of about $85,000.[44] **Figure 10** and **Figure 11** show the then-named HVP.

**Figure 10. Photograph Showing HVP**

**Source:** Navy photograph dated April 4, 2014, with a caption that reads in part: "Rear Adm. Matthew Klunder, chief of naval research, shows off a Hypervelocity Projectile (HVP) to CBS News reporter David Martin during an interview held at the Naval Research Laboratory's materials testing facility." Accessed August 12, 2015, at http://www.navy.mil/view_image.asp?id=174517.

One advantage of GLGP is that the 5-inch and 155mm guns from which it would be fired are already installed on Navy cruisers and destroyers, creating a potential for rapidly proliferating GLGP through the cruiser-destroyer force, once development of GLGP is complete and the weapon has been integrated into cruiser and destroyer combat systems. Navy cruisers each have two 5-inch guns, Navy Arleigh Burke (DDG-51) class destroyers each have one 5-inch gun, and the Navy's three new Zumwalt class (DDG-1000) destroyers each have two 155mm guns. **Figure 12** shows launch packages for the then-named HVP configured for 5-inch guns, 155mm guns, and EMRG.

[44] Sydney J. Freedberg Jr., "$86,000 + 5,600 MPH = Hyper Velocity Missile Defense," *Breaking Defense*, January 26, 2018; Jared Keller, "The U.S. Military Has a New 'Bullet' That Attacks At Mach Six (with 100 Mile Range)," *National Interest*, February 3, 2018.

**Figure 11. HVP**

**Source:** Slide 7 from Navy briefing entitled "Electromagnetic Railgun," NDIA Joint Armaments Forum, Exhibition & Technology Demonstration, May 14, 2014, LCDR Jason Fox, USN, Assistant PM [Program Manager], Railgun Ship Integration, Distribution A, Approved for Public Release, accessed August 13, 2015, at http://www.dtic.mil/ndia/2014armaments/WedFox.pdf.

In September 2012, when the concept was to use the then-named HVP as a common projectile for both EMRG and powder guns (which might still happen), the Navy described the projectile as

> a next generation, common, low drag, guided projectile capable of completing multiple missions for gun systems such as the Navy 5-Inch, 155-mm, and future railguns. Types of missions performed will depend on gun system and platform. The program goal is to address mission requirements in the areas of Naval Surface Fire Support, Cruise Missile Defense, Anti-Surface Warfare, and other future Naval mission areas. Mission performance will vary from gun system, launcher, or ship. HVP's low drag aerodynamic design enables high velocity, maneuverability, and decreased time-to-target. These attributes coupled with accurate guidance electronics provide low cost mission effectiveness against current threats and the ability to adapt to air and surface threats of the future.
>
> The high velocity compact design relieves the need for a rocket motor to extend gun range. Firing smaller more accurate rounds improves danger close/collateral damage requirements and provides potential for deeper magazines and improved shipboard safety. Responsive wide area coverage can be achieved using HVP from conventional gun systems and future railgun systems.
>
> The modular design will allow HVP to be configured for multiple gun systems and to address different missions. The hypervelocity projectile is being designed to provide lethality and performance enhancements to current and future gun systems. A

hypervelocity projectile for multiple systems will allow for future technology growth while reducing development, production, and total ownership costs.

Research Challenges & Opportunities [include]:

-- High acceleration tolerant electronic components

-- Lightweight, high strength structural composites

-- Miniature, high density electronic components

-- Safe high energy propellants compatible with shipboard operations

-- Aerothermal protection systems for flight vehicles[45]

**Figure 12. HVP Launch Packages**

Launch packages for 5-inch gun, 155mm gun, and EMRG

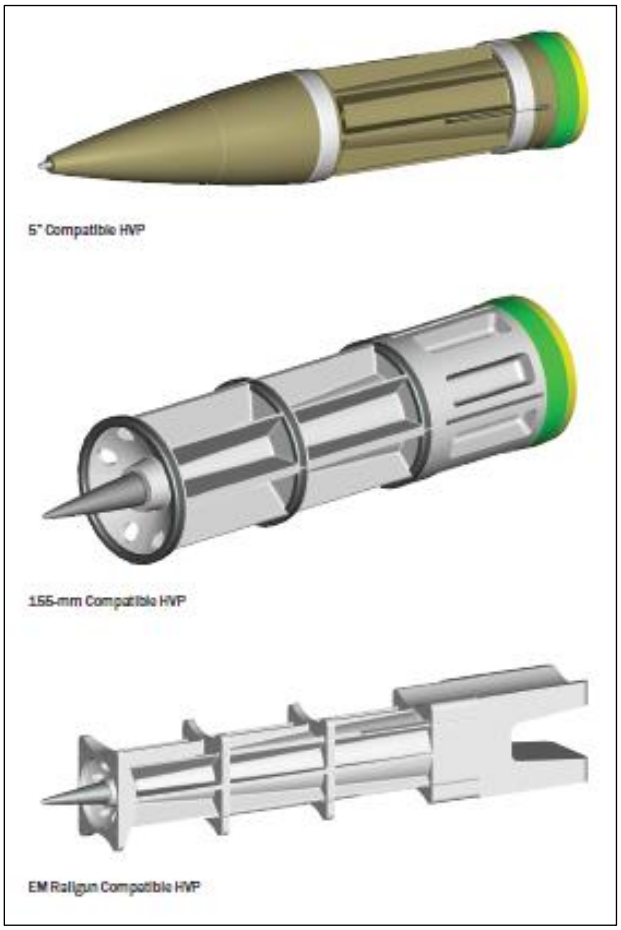


**Source:** BAE Systems, "Hypervelocity Projectile (HVP)," 2014, accessed August 14, 2015, at http://www.baesystems.com/download/BAES_178505/hyper-velocity-projectile--datasheet.

When fired from 5-inch powder guns, GLGP reportedly achieves a speed of roughly Mach 3, which is roughly half the speed it achieves when fired from EMRG, but more than twice the

[45] Office of Naval Research, "Hypervelocity Projectile," September 2012, accessed October 21, 2016, at http://www.onr.navy.mil/~/media/Files/Fact-Sheets/35/Hypervelocity-Projectile-2012B.ashx.

speed of a conventional 5-inch shell fired from a 5-inch gun.[46] This is apparently fast enough for countering at least some ASCMs. The Navy states that "The HVP—combined with the MK 45 [5-inch gun][47]—will support various mission areas including naval surface fire support, and has the capacity to expand to a variety of anti-air threats, [and] anti-surface [missions], and could expand the Navy's engagement options against current and emerging threats."[48]

A December 21, 2016, opinion column states the following:

> Now the Navy is acquiring rail guns that use such energy to fire 15- to 25-pound, 18-inch projectiles at 5,000 miles per hour. They hit with the impact of a train slamming into a wall at 100 miles per hour. The high-speed, hence high-energy projectiles, which cost just $25,000, can radically improve fleet-protection capabilities: A barrage of them could counter an enemy's more expensive anti-ship missiles.
>
> The daunting challenge posed by defense against the proliferating threat of ballistic missiles is that it is prohibitively expensive to be prepared to intercept a swarm of incoming missiles. New technologies, however, can revolutionize defense against ballistic missiles because small, smart projectiles can be inexpensive. It takes 300 seconds to pick up such a launched missile's signature, the missile must be tracked and a vector calculated for defensive projectiles. A single 25-pound projectile can dispense more than 500 three-gram tungsten impactors and be fired at hypervelocity by electromagnetic energy. Their impact force—their mass times the square of their velocity—can destroy expensive missiles and multiple warheads.[49]

**Figure 13** is a slide showing the potential application of the then-named HVP to 5-inch power guns, 155mm powder guns, and EMRG. The first line of the slide in **Figure 13**, for example, discusses then-named HVP's use with 5-inch powder guns, stating that it uses a high-explosive (HE) warhead for the NSFS mission;[50] that a total of 113 5-inch gun barrels are available in the fleet (which could be a reference to 22 cruisers with two guns each, and 69 destroyers with one gun each); and that as a game-changing capability, it is guided and can be used at ranges of up to 26 nautical miles to 41 nautical miles for NSFS operations, for countering ASCMs, and for anti-surface warfare (ASuW) operations (i.e., attacking surface ships and craft).

[46] Source: Sam LaGrone, "Updated: Navy Researching Firing Mach 3 Guided Round from Standard Deck Guns," *USNI News*, June 1, 2015 (updated June 2, 2015).

[47] The type of 5-inch gun on Navy cruisers and destroyers is called the Mark 45.

[48] Naval Surface Warfare Center Dahlgren Division Corporate Communications, "DEPSECDEF Loads HVP on Test Range, Observes Repetitive Rate Electromagnetic Railgun's Commissioning Series," *Navy News Service*, May 8, 2015, accessed August 12, 2015, at http://www.navy.mil/submit/display.asp?story_id=86987.

[49] George F. Will, "Can Mattis Make Peace Through Technology?" *Washington Post*, December 21, 2016.

[50] The "KE" in the next line down means that when fired from EMRG, the projectile can alternatively attack targets using its own kinetic energy (i.e., by impacting the target at hypersonic speed).

**Figure 13. HVP Application to Various Launchers**

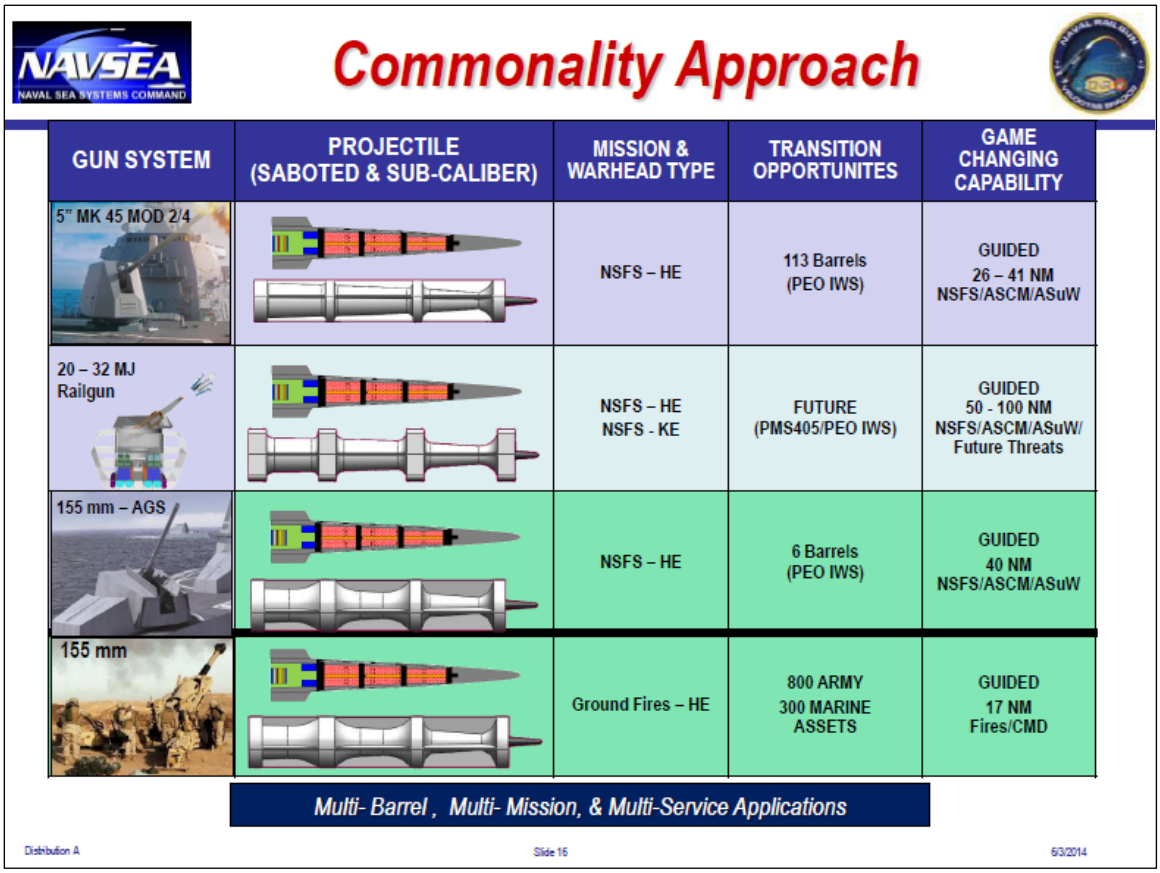


**Source:** Slide 16 from Navy briefing entitled "Electromagnetic Railgun," NDIA Joint Armaments Forum, Exhibition & Technology Demonstration, May 14, 2014, LCDR Jason Fox, USN, Assistant PM [Program Manager], Railgun Ship Integration, Distribution A, Approved for Public Release, accessed August 13, 2015, at http://www.dtic.mil/ndia/2014armaments/WedFox.pdf.

**Figure 14** is a not-to-scale illustration of how then-named HVPs fired from EMRGs and 5-inch guns could be used to counter various targets, including ASCMs and ASBMs.

**Figure 14. Navy Slide Depicting HVP Operations Against Various Target Types**

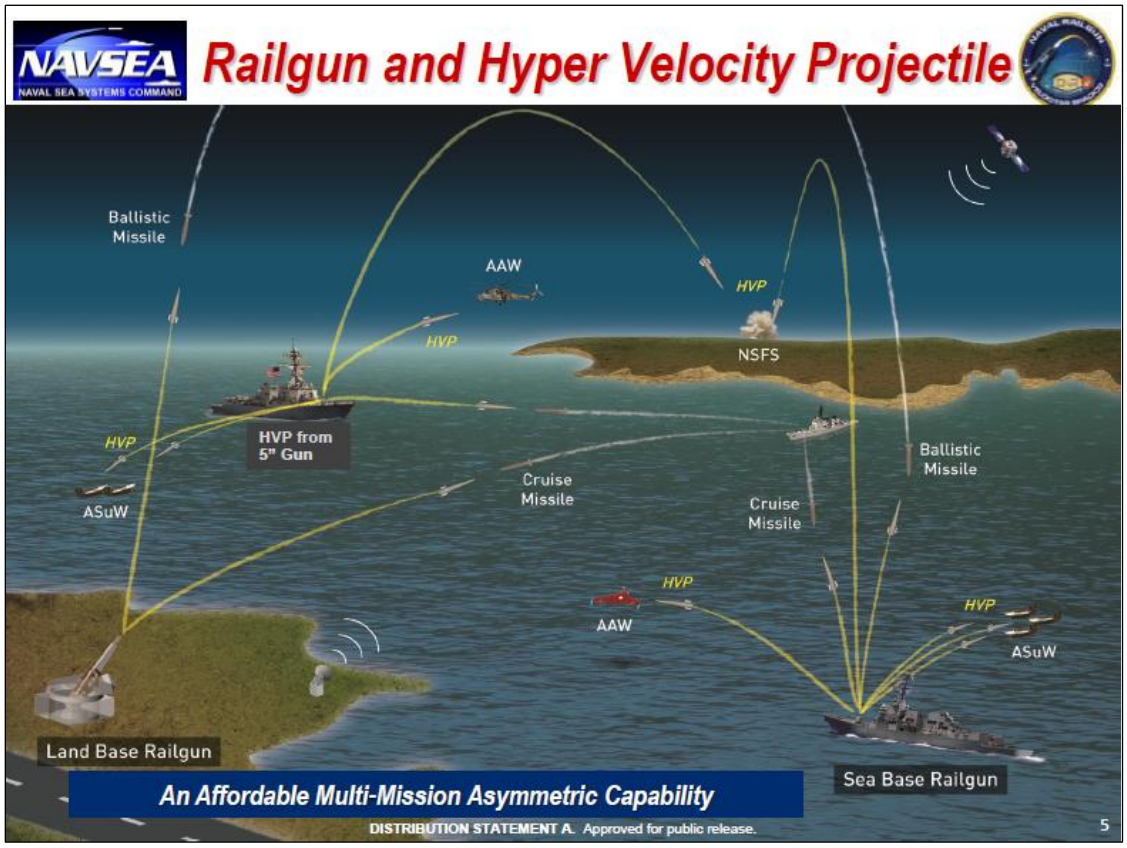


**Source:** Slide 5 from Navy briefing entitled "Electromagnetic Railgun," NDIA Joint Armaments Forum, Exhibition & Technology Demonstration, May 14, 2014, LCDR Jason Fox, USN, Assistant PM [Program Manager], Railgun Ship Integration, Distribution A, Approved for Public Release, accessed August 13, 2015, at http://www.dtic.mil/ndia/2014armaments/WedFox.pdf.

## *DOD Interest in GLGP*

GLGP emerged as a program of particular interest to DOD, which has exploring the potential for using the weapon across multiple U.S. military services. An April 11, 2016, press report states the following:

> The Pentagon wants to take a weapon originally designed for offense, flip its punch for defense and demonstrate by 2018 the potential for the Army and Navy to conduct missile defense of bases, ports and ships using traditional field guns to fire a new hypervelocity round guided by a mobile, ground variant of an Air Force fighter aircraft radar.
>
> The Strategic Capabilities Office [SCO] is working with the Army, Navy and Air Force to craft a Hypervelocity Gun Weapon System that aims, in part, to provide China and Russia an example of a secret collection of new U.S. military capabilities the Defense Department is bringing online in an effort to strengthen conventional deterrence.
>
> "It is a fantastic program," Will Roper, [then-]Strategic Capabilities Office director, said in a March 28 interview with reporters, who said the project aims "to completely lower the

> cost of doing missile defense" by defeating missile raids at a lower cost per round and, as a consequence, imposing higher costs on attackers.[51]

A May 2, 2016, press report states the following:

> "We thought rail guns were something we were really going to go after, but it turns out that powder guns firing the same hypervelocity projectiles gets you almost as much as you would get out of the electromagnetic rail gun, but it's something we can do much faster," [then-Deputy Secretary of Defense Robert] Work said. "We are going to say [to the next administration] 'Look, we believe this is the place where you want to put your money, but we're going to have enough money in there for both the electromagnetic rail gun and the powder gun.' So if the new administration says 'No really the electromagnetic rail gun is the way I want to go,' knock yourself out, we've set you up for success."[52]

A May 5, 2016, press report similarly states the following:

> Come January [2017], the Pentagon will almost assuredly have new leadership, complete with a new vision for how the Department of Defense should operate, organize and plan for the future.
>
> It's a reality facing down [then-]Defense Secretary Ash Carter and [then-]Deputy Secretary Bob Work as they try to complete a transformation at the Pentagon, one which both men have said is vital to making sure the US is able to maintain its technological edge against great powers like Russia and China in the future....
>
> "One of the things we have done in our program is build in a lot of different options that they [i.e., officials in the next administration] can pull levers on," Work explained.
>
> As an example, he pointed to the idea of an electromagnetic railgun. Initially, Work and his team thought that was an area that would be a major focus of development, but as they experimented they realized that a powder gun with a hypervelocity round could have almost the same impact—but at a fraction of the cost, because it did not require the development, testing and adaptation of a new gun.
>
> "We're going to say 'look, this is the place where [we think] you want to put your money,' but we're going to have enough money in both the electromagnetic railgun and the powder gun that if the new administration says 'I really want the electromagnetic railgun, this is the way I want to go,' knock yourself out," Work said. "We've set you up for success."[53]

A May 9, 2016, press report states the following:

> [Then-]Deputy Defense Secretary Bob Work said last week that current Pentagon leaders have made investments intended to position the next presidential administration to offset expected Russian and Chinese technological advancements, specifically highlighting lessons learned about a new hypervelocity gun.
>
> Work... said one of the key findings to emerge from the effort was the Hypervelocity Gun Weapon System, which he said could be poised to displace much of what the Defense Department had planned to invest in the Navy's electromagnetic rail gun.

---

[51] Jason Sherman, "SCO Aims To Flip The Script on Missile Defense With Hypervelocity Gun," *Inside the Navy*, April 11, 2016.

[52] Scott Maucione, "DoD Is Setting Up the Third Offset for the Next President," *Federal News Radio*, May 2, 2016.

[53] Aaron Mehta, "Pentagon No. 2: How to Keep Third Offset Going in the Next Administration," *Defense News*, May 5, 2016.

> "We thought rail guns were going to be something we were really going to go after," he said, adding that "it turns out that powder guns" are capable of firing the same projectiles, at the same velocity, for far less cost.[54]

A July 18, 2016, press report states the following:

> The Pentagon's office tasked with tweaking existing and developing military technology for new uses is pushing development of ammo meant for the electromagnetic railgun for use in existing naval guns and artillery pieces....
>
> About year and a half ago, researchers at the Pentagon's Strategic Capabilities Office and inside the service realized that there was more short-term promise for not only the Navy but the Army to use the Hyper Velocity Projectiles (HVP) rounds overseen by the Office of Naval Research (ONR) in both services existing powder guns, said [then-]SCO [Strategic Capabilities Office] head William Roper said last week.
>
> "To me they were just interesting test articles a few years ago, but thanks to that service input and us funding some high-risk demonstration we now think that we can do pretty revolutionary things with existing powder guns—think howitzers, Paladins, the Navy's five-inch guns. We've shifted emphasis to that," Roper said during a Wednesday talk at the Center for Strategic and International Studies (CSIS).
>
> "Not that we're not interested in railgun—we are—but if you look at the delta between fielding in quantity—we have [more than] a 1,000 powder guns, we have very few railguns."...
>
> The SCO-led research effort will work to create HVP sensor and a fire control regime that will find its way eventually to the railgun project, Roper said.
>
> "So when the railgun is ready to field it will be able to just be dropped in place as a better launcher as opposed to being a great technology that we have to build a new architecture for," he said.
>
> "We're going to take the bet and let's see if we can field this and let's completely flip the paradigm of missile defense."[55]

A September 19, 2016, press report states the following:

> After much deliberation, both public and private, the Pentagon, which has shifted emphasis away from the electromagnetic rail gun as a next-generation missile defense platform, sees a new hypervelocity powder gun technology as the key to demonstrating to potential adversaries like China and Russia that U.S. military units on land and sea can neutralize large missile salvos in future conflicts....
>
> "If you do that, you change every 155 [mm] howitzer in the U.S. Army in every NATO country into a cruise missile and tactical ballistic missile defender and, oh by the way, you extend their offensive range," [then-Deputy Secretary of Defense Robert] Work said.

The article states that Work "is pushing hard to lay the groundwork for the next presidential administration to conduct a military exercise called 'Raid Breaker' that would demonstrate the capabilities of the Hypervelocity Gun Weapon System program." It quotes him as stating that if DOD conducted such an exercise against 100 cruise missiles and ballistic missiles, "and were able to convince [potential adversaries] that we're able to knock down 95 to 98 of them, then that

[54] Tony Bertuca, "Work: New Hypervelocity Gun Could Displace Rail Gun in Next Administration," *Inside the Navy*, May 9, 2016.

[55] Sam LaGrone, "Pentagon: New Rounds For Old Guns Could Change Missile Defense for Navy, Army," *USNI News*, July 16, 2016 (updated July 19, 2016).

would have an enormous impact on the competition in the Pacific, on the competition in Europe and would [clearly] improve conventional deterrence." It further quotes him as stating that DOD's modeling shows that "if we can close the fire support with a controlled solution," the weapon would be able to shoot down most of a 100-missile raid.[56]

A May 19, 2017, press report states the following:

> An Army Howitzer is now firing a super high-speed, high-tech, electromagnetic Hyper Velocity Projectile, initially developed as a Navy weapon, an effort to fast-track increasing lethal and effective weapons to warzones and key strategic locations, Pentagon officials said.
>
> Overall, the Pentagon is accelerating developmental testing of its high-tech, long-range Electro-Magnetic Rail Gun by expanding the platforms from which it might fire and potentially postponing an upcoming at-sea demonstration of the weapon, Pentagon and Navy officials told Scout Warrior.
>
> While initially conceived of and developed for the Navy's emerging Rail Gun Weapon, the Pentagon and Army are now firing the Hyper Velocity Projectile from an Army Howitzer in order to potential harness near-term weapons ability, increase the scope, lethality and range ability to accelerate combat deployment of the lethal, high-speed round.[57]

A January 26, 2018, press report states the following:

> The Pentagon's Strategic Capabilities Office will test-fire a radical new missile defense system in less than a year....
>
> "That projectile is being designed to engage multiple threats," [Vincent Sabio, the HVP program manager at the Pentagon's Strategic Capabilities Office] said of the HVP. "There may be different modes that it operates in (in terms of) how does it maneuver, how does it close on the threat, and whether it engages a (explosive) warhead or whether it goes into a hit-to-hill mode. Those will all be based on the threat, and we can tell it as it's en route to the threat, 'here's what you're going after, this is the mode you're going to engage in.'"...
>
> So when will the Army and Navy actually get Hyper Velocity Projectiles? Both services are already working with SCO to plan a handover of the program, Sabio said. His role is just to prove the key technology works: specifically, to demonstrate that an HVP can maneuver close enough to "an inbound, maneuvering threat" that it could have destroyed it if fitted with the proper warhead. Sabio's not developing that warhead.
>
> "We are building out the full fire control loop including the sensors, the coms links, the projectile, the launchers (i.e.) the guns," he said. "The command and control…. I leave that to my independent transition partners, Navy and Army."
>
> And by when will the demonstration happen? "Well," said Sabio, "my program ends less than a year from now."[58]

A January 8, 2019, press report states

> Last summer USS Dewey (DDG-105) fired 20 hyper velocity projectiles (HVP) from a standard Mk 45 5-inch deck gun in a quiet experiment that's set to add new utility to the

[56] Tony Bertuca, "DOD's New Hypervelocity Gun Technology Emerging As Key BMD Capability," *Inside the Navy*, September 19, 2016.

[57] Kris Osborn, "Pentagon to Accelerate Rail Gun Hypervelocity Projectile—Fires From Army Howitzer," *Scout Warrior*, May 19, 2017.

[58] Sydney J. Freedberg Jr., "$86,000 + 5,600 MPH = Hyper Velocity Missile Defense," *Breaking Defense*, January 26, 2018. See also Yasmin, "Secretive Pentagon Office Share Details About Hypervelocity Missile Defense Weapon (Updated)," *National Defense*, January 26, 2018.

> weapon found on almost every U.S. warship, officials familiar with the test have told USNI News.
>
> The test, conducted by the Navy and the Pentagon's Strategic Capabilities Office as part of the Rim of the Pacific (RIMPAC) 2018 international exercise, was part of a series of studies to prove the Navy could turn the more than 40-year-old deck gun design into an effective and low-cost weapon against cruise missiles and larger unmanned aerial vehicles….
>
> While officials confirmed to USNI News that the RIMPAC test was unclassified, both the Office of the Secretary of Defense and the Office of Naval Research would not acknowledge the test when asked by USNI News.[59]

## Remaining Development Challenges

Although the Navy in recent years has made considerable progress in developing SSLs, EMRG, and GLGP, a number of significant development challenges remain. Overcoming these challenges will likely require years of additional development work, and ultimate success in overcoming them is not guaranteed.

### Solid-State Lasers (SSLs)

Remaining development challenges for high-energy SSLs include, among other things, making the system rugged enough for extended shipboard use, making the beam director (the telescope-like part of the laser that sends the beam toward the target) suitable for use in a marine environment (where moisture and salt in the air can be harsh on equipment), and integrating the system into the ship's electrical power system and combat system. A January 23, 2015, blog post co-authored by the Office of Naval Research's program officer for the Navy's SSL program states the following:

> In the near term, many challenges remain to develop and operate high-energy laser systems in the maritime environment that are unique to the Navy and Marine Corps. Among these challenges is dealing with the heat generated as power levels increase. A second issue is packing sufficient power on the platform, which will require advanced battery, generator, power conditioning, and hybrid energy technologies. Current laser technologies are approximately 30 percent electrically efficient. Corrosion and contamination of optical windows by shipboard salt spray, dirt, and grime also are technical challenges. In addition, atmospheric turbulence resulting from shifting weather conditions, moisture, and dust is problematic. Turbulence can cause the air over long distances to act like a lens, resulting in the laser beam's diffusing and distorting, which degrades its performance.
>
> Much progress has been made in demonstrating high-energy laser weapon systems in the maritime environment, but there is still much to be done. Additional advances will be required to scale power levels to the hundreds of kilowatts that will make high[-]energy lasers systems robust, reliable, and affordable. Higher power levels are important for the ability to engage more challenging threats and improve the rate and range at which targets can be engaged.

[59] Sam LaGrone, "Navy Quietly Fires 20 Hyper Velocity Projectiles Through Destroyer's Deckgun," *USNI News*, January 8, 2019.

> The programs managed by ONR are addressing these remaining issues while positioning this important warfighting capability toward an acquisition program and eventual deployment with the fleet and force.[60]

Skeptics sometimes note that proponents of high-energy military lasers over the years have made numerous predictions about when lasers might enter service with DOD, and that these predictions repeatedly have not come to pass. Viewing this record of unfulfilled predictions, skeptics have sometimes stated, half-jokingly, that "lasers are X years in the future—and always will be." Laser proponents acknowledge the record of past unfulfilled predictions, but argue that the situation has now changed because of rapid advancements in SSL technology and a shift from earlier ambitious goals (such as developing megawatt-power lasers for countering targets at tens or hundreds of miles) to more realistic goals (such as developing kilowatt-power lasers for countering targets at no more than a few miles). Laser proponents might argue that laser skeptics are vulnerable to what might be called cold plate syndrome (i.e., a cat that sits on a hot plate will not sit on a hot plate again—but it will not sit on a cold plate, either).

## EMRG and GLGP

Remaining development challenges for EMRG involve items relating to the gun itself (including increasing barrel life to desired levels), the projectile, the weapon's electrical power system, and the weapon's integration with the ship. Fielding GLGP on cruisers and destroyers equipped with 5-inch and 155mm powder guns would additionally require GLGP to be integrated with the combat systems of those ships. The Navy stated the following in 2017:

> The Railgun INP is in the second phase of a two-phase development effort. INP Phase I (FY 2005-2011) successfully advanced foundational enabling technologies and explored, through analysis and war gaming, the railgun's multi-mission utility. Launcher energy was increased by a factor of five to the system objective muzzle energy of 32 mega joules (110 nautical miles range) and barrel life was increased from tens of shots to hundreds of shots. Two contractors delivered tactical-style advanced containment launchers proving the feasibility of composite wound launchers. Pulsed power size was cut in half while thermal management for firing rate (rep-rate) was added to the design. INP Phase II focuses on increasing rep-rate capability. Rep-rate adds new levels of complexity to all of the railgun sub-systems, including thermal management, autoloader, and energy storage. A new test facility capable of supporting rep-rate testing at full energy level is coming on line at the Terminal Range at the Naval Surface Warfare Center, Dahlgren, Virginia. A new demonstration launcher (DL1) has been delivered and installed at the Terminal Range to commission the new facility. Additional rep-rate composite launchers (RCLs) capable of rep-rate are in various stages of design and fabrication. The Office of Naval Research will develop a tactical prototype railgun launcher and pulsed-power architecture suitable for advanced testing both afloat and ashore.[61]

A May 19, 2017, press report states the following:

> Consider 35 pounds of metal moving at Mach 5.8. Ten shots per minute. 1,000 shots before the barrel wears out under the enormous pressures. That's the devastating firepower the Navy railgun program aims to deliver in the next two years, and they're well on their way.
>
> "We continue to make great technical progress," said Office of Naval Research program manager Tom Boucher. Boucher and an aide briefed me in the blazing hot courtyard of the

[60] Peter Morrison and Dennis Sorenson, "Developing a High-Energy Laser for the Navy," Future Force, January 23, 2015, accessed August 13, 2015, at http://futureforce.navylive.dodlive.mil/2015/01/high-energy-laser/. The authors are identified at the end of the post as follows: "Peter Morrison is the Office of Naval Research's program officer for the Navy's Solid-State Laser program. Dennis Sorenson is a contractor with the Office of Naval Research."

[61] U.S. Navy, *U.S. Navy Program Guide 2017*, p. 169.

> Pentagon, which was hosting the annual DoD Lab Day — a kind of military-grade science fair.
>
> Three years ago, then-Chief of Naval Operations Jonathan Greenert declared that railguns —which fire projectiles with electromagnetic pulses rather than gunpowder—had come so close to battle-ready that he wanted to test-fire one at sea. Since then the Navy has changed course, deciding that permanent land-based test sites would provide more and better data for fewer dollars than an ad hoc installation aboard a repurposed fast transport (variously known as JHSV or EFP). So on November 17, along the Potomac River at the Naval Surface Warfare Center in Dahlgren, Va., a new 32-megajoule railgun built by BAE Systems opened fire for the first time.... A second railgun is being set up at the Army's White Sands Missile Range in the New Mexico desert, where there's enough wide-open space to fire the weapon at its maximum range of more than a hundred nautical miles.
>
> While White Sands tests the long-range performance of the projectile, Dahlgren will work on the weapon itself. Previous test weapons were like medieval bombards, firing just a few times per day. The Dahlgren team is now making multiple shots per hour as they work out the bugs, and by the end of the year they expect to reach the goal of 10 shots per minute.
>
> Once they've reached the 10-round a minute rate, Dahlgren will switch focus to barrel life. A decade ago, experimental railguns often wore out their barrel with a single shot. With new materials better able to endure the intense stresses, the barrels on the current test weapons can last for hundreds of shots before requiring replacement—roughly how long a battleship's 16″ barrels lasted back in World War II. The goal is a barrel that lasts 1,000 rounds.[62]

## Transitioning from Development to Procurement

Transitioning military technology efforts from the research and development phase to the procurement phase can sometimes be a challenge. Some military technology efforts fail to make the transition, falling into what observers sometimes refer to as the "valley of death" metaphorically located between the research and development phase and the procurement phase. A February 27, 2017, press report states that

> The Navy has established programs for high-energy lasers and the electromagnetic railgun at Naval Sea Systems Command acquisition directorates, paving the way for technologies that have long been stuck in research and development to potentially be installed on the service's ships one day.
>
> The program executive office for integrated warfare systems (PEO IWS) is developing acquisition plans for lasers and the electromagnetic railgun, as well as the railgun's associated weapon, the hypervelocity projectile, according to NAVSEA spokeswoman Christianne Witten.
>
> Last August, a "Directed Energy Program Office" was set up at the above-water sensors directorate within PEO IWS, Witten wrote in a Feb. 22 email. The new office was established to "accelerate the fielding of High Energy Laser (HEL) weapon systems to the fleet," according to the spokeswoman.
>
> Additionally, last June, the Navy's acquisition executive charged the surface-ship weapons program office at PEO IWS with developing an acquisition and fielding plan for the railgun and the hypervelocity projectile, Witten said.[63]

[62] Sydney J. Freedberg Jr., "Navy Railgun Ramps Up in Test Shots," *Breaking Defense*, May 19, 2017.

[63] Justin Doubleday, "Laser, Railgun Programs Transitioned to Navy Acquisition Offices," *Inside the Navy*, February 27, 2017.

# Issues for Congress

## Potential Oversight Questions

Potential oversight questions for Congress regarding Navy programs for SNLWS, EMRG, and GLP include the following:

- Using currently available air-defense weapons, how well could Navy surface ships defend themselves in a combat scenario against an adversary such as China that has or could have large numbers of missiles and UAVs? How would this situation change if Navy surface ships in coming years were equipped with SNLWS, EMRG, GLGP, or some combination of these systems?
- How significant are the remaining development challenges for SNLWS, EMRG, and GLGP? Are current schedules for developing SNLWS, EMRG, and GLGP appropriate in relation to remaining development challenges and projected improvements in enemy missiles?
- When does the Navy anticipate issuing roadmaps detailing its plans for procuring and installing production versions of SNLWS, EMRG, and GLGP on specific Navy ships by specific dates?
- Will the kinds of surface ships that the Navy plans to procure in coming years have sufficient space, weight, electrical power, and cooling capability to take full advantage of SNLWS and EMRG? What changes, if any, would need to be made in Navy plans for procuring large surface combatants (i.e., destroyers and cruisers) or other Navy ships to take full advantage of SNLWS and EMRGs?[64]
- Given the Navy's interest in HPV, how committed is the Navy to completing the development of EMRG and eventually deploying EMRGs on Navy ships?
- Are the funding line items for SNLWS, EMRG, and GLDP sufficiently visible for supporting congressional oversight sufficiently visible for supporting congressional oversight?

# Legislative Activity for FY2020

## Summary of Congressional Action on FY2020 Funding

**Table 1** summarizes congressional action on selected Navy FY2020 research and development account line items (known as program elements, or PEs) that related to shipboard lasers, EMRG, and GLGP. These PEs do not necessarily capture all Navy research and development work related to these efforts—additional funding for these efforts may occur in other PEs that do not explicitly indicate that they include funding for these efforts.

[64] For a press report related to this issue, see Megan Eckstein, "Navy Making Room for Railguns in Next Warship, But No Extra Investments," *USNI News*, August 29, 2018.

**Table 1. Summary of Congressional Action on FY2020 Funding**

In millions of dollars, rounded to nearest tenth

| | | Authorization | | | Appropriation | | |
|---|---|---|---|---|---|---|---|
| **Program Element (PE) number, PE name, budget line number** | **Req.** | **HASC** | **SASC** | **Conf.** | **HAC** | **SAC** | **Conf.** |
| ***SSL-TM*** | | | | | | | |
| PE 0603801N, Innovative Naval Prototypes (INP) Advanced Technology Development (Line 27), Project 2480, SSL-TM | 8.0 | 8.0 | 8.0 | | 8.0 | 8.0? | |
| PE 0603382N, Advanced Combat Systems Technology (Line 33), Project 2480, SSL-TM | 3.9 | 3.9 | 3.9 | | 3.9 | 3.9 | |
| ***ODIN*** | | | | | | | |
| PE 0603925N, Directed Energy and Electric Weapon System (Line 72), Project 9823, Lasers for Navy application, ODIN | 19.9 | 19.9 | 19.9 | | 19.9 | 19.9 | |
| ***SNLWS*** | | | | | | | |
| PE 0603925N, Directed Energy and Electric Weapon System (Line 72), Project 3402, Surface Navy Laser Weapon System (SNLWS) | 89.2 | 89.2 | 89.2 | | 89.2 | 89.2 | |
| ***HELCAP*** | | | | | | | |
| PE 0603925N, Directed Energy and Electric Weapon System (Line 72), Project 2731, High Energy Laser Counter ASCM Project (HELCAP) | 9.0 | 9.0 | 9.0 | | 6.8 | 9.0 | |
| PE 0603801N, Innovative Naval Prototypes (INP) Advanced Technology Development (Line 27), Project 3400, Innovative Naval Prototypes (INP) Advanced Technology Development, Program Title: Directed Energy / Electric Weapons | 37.2 | 37.2 | 37.2 | | 37.2 | 37.2? | |
| ***EMRG/GLGP*** | | | | | | | |
| PE 0602792N, Innovative Naval Prototypes(INP) Applied Research (Line 15), Project 2481, EMRG | 7.6 | 7.6 | 7.6 | | 7.6 | 7.6 | |
| PE 0603801N, Innovative Naval Prototypes (INP) Advanced Technology Development (Line 27), Project 2481, EMRG | 7.4 | 27.8 | 37.2 | | 7.4 | 7.4? | |
| PE 0603795N, Land Attack Technology (Line 69), Project 3401, Guided Projectile | 4.6 | 4.6 | 4.6 | | 4.6 | 1.4 | |
| ***Congressional add*** | | | | | | | |
| PE 0603925N, Directed Energy and Electric Weapon System (Line 72), Program increase - high energy laser weapon system for counter-UAS area defense | 0 | 0 | 0 | | 10.0 | 0 | |

**Source:** Table prepared by CRS based on Navy FY2020 budget submission, committee and conference reports, and explanatory statements on FY2020 National Defense Authorization Act and FY2020 DOD Appropriations Act.

**Notes: HASC** is House Armed Services Committee; **SASC** is Senate Armed Services Committee; **HAC** is House Appropriations Committee; **SAC** is Senate Appropriations Committee; **Conf.** is conference agreement. These PEs do not necessarily capture all Navy research and development work related to shipboard lasers, EMRG, and GLGP; additional funding for these efforts may occur in other PEs whose names and project titles do not explicitly indicate that they are for these efforts.

## FY2020 National Defense Authorization Act (H.R. 2500/S. 1790)

### House

The House Armed Services Committee, in its report (H.Rept. 116-120 of June 19, 2019) on H.R. 2500, recommended the funding levels shown in the HASC column of **Table 1**. The recommended increase for EMRG/GLGP in line 27 is for "Electromagnetic railgun." (Page 427)

The entry in the committee's funding table for line 27 includes an additional recommended increase of $22.65 million for "program increase," but it is unclear from the notation what project within line 27 the recommended increase is for.

H.Rept. 116-120 states:

> *High Energy Laser system integration*
>
> The committee is encouraged by the Navy's rapid demonstration of Laser Weapon Systems (LaWSs) on surface ships. In a short period of time, the Navy has deployed the 30 kilowatts (kW) LaWS on the USS Ponce (Afloat Forward Staging Base (Interim)-15) followed by the 150 kW Laser Weapon System Demonstrator (LWSD) on the USS Portland (Landing Platform/Dock-27) in 2019. The improvements in power and beam quality make this a near 100 fold improvement in lethality. The committee is also encouraged by the 60 kW HELIOS program for integration on Destroyer Designated Guided ships by 2020. However, there appears to be more opportunity to integrate High Energy Laser (HEL) systems on large capital ships including aircraft carrier, fixed wing, nuclear powered (CVNs) and large amphibious ships to increase defensive capability and lethality of our expeditionary forces as evidenced by the deployment of LWSD on the USS Portland. The committee directs the Secretary of the Navy to submit a report to the congressional defense committees not later than April 1, 2020, describing a path forward for integration of HEL Systems 150–300 kW on large capital warships, including CVNs and large amphibious ships. (Page 47)

## Senate

The Senate Armed Services Committee, in its report (S.Rept. 116-48 of June 11, 2019) on S. 1790, recommended the funding levels shown in the SASC column of **Table 1**. Regarding a line item in the defense-wide (rather than Navy) research and development account that is not shown in **Table 1**, S.Rept. 116-48 states:

> **Hypervelocity Gun Weapon System**
>
> The budget request contained $1.3 billion in Research, Development, Test, and Evaluation (RDT&E), Defense-wide, for PE 64250D8Z advanced innovative technologies of the Strategic Capabilities Office (SCO), of which no funds were requested for the Hypervelocity Gun Weapon System (HGWS).
>
> The committee notes that this system may be a promising pathway to provide more cost-effective point defense in theater and encourages the SCO to continue to prove out the capability in order to facilitate transition to one or more military departments.
>
> Accordingly, the committee recommends an increase of $81.0 million in RDT&E, Defense-wide, for PE 64250D8Z for HGWS. (Page 100)

S.Rept. 116-48 also states:

> **Navy laser integration plans**
>
> The committee is greatly encouraged by the Navy's rapid demonstration of laser weapon systems on surface ships. In 2014, the Navy deployed a 30 kW Laser Weapon System (LaWS) on USS Ponce, which will be followed by a 150 kW LaWS on USS Portland (LPD-27), planned for 2019. The committee understands that the improvements in power and beam quality make the 150 kW LaWS nearly a 100-fold improvement in lethality.
>
> The committee is also encouraged by the Navy's plans to integrate the 60 kW High Energy Laser and Integrated Optical-dazzler with Surveillance (HELIOS) program into Arleigh Burke-class destroyers beginning in 2021.

> If the HELIOS effort succeeds, the committee believes there may be additional opportunities to integrate High Energy Laser (HEL) systems on large capital ships, including aircraft carriers and large amphibious ships, to increase the defensive capabilities and lethality of our carrier strike groups and expeditionary forces.
>
> If the Navy has continued positive results at increased radiated power, there may also be broader applications of laser weapons for providing capability for fleet air defense from more Navy vessels.
>
> Therefore, the committee directs the Secretary of the Navy to provide a briefing to the Senate Armed Services Committee, not later than October 1, 2019, describing the path forward for shipboard integration of HEL systems and the risk reduction plan to achieve improved technology and manufacturing readiness levels for such higher power systems. The committee also directs the Secretary to provide briefings on the progress of laser systems development and testing every 6 months through fiscal year 2021. (Page 114)

## FY2020 DOD Appropriations Act (H.R. 2968/S. 2474)

### House

The House Appropriations Committee, in its report (H.Rept. 116-84 of May 23, 2019) on H.R. 2968, recommended the funding levels shown in the HAC column of **Table 1**. The recommended reduction of $2.25 million for line 72, project 2731 is for "Project 2731 early to need." (Page 255) As also shown in the table, the committee recommended an increase of $10.0 million in line 72 for "Program increase - high energy laser weapon system for counter-UAS area defense." (Page 255)

### Senate

The Senate Appropriations Committee, in its report (S.Rept. 116-103 of September 12, 2019) on S. 2474, recommended the funding levels shown in the SAC column of **Table 1**.

S.Rept. 106-103 recommends a net increase of $2.7 million for line 27, consisting of a reduction of $12.3 million for "Improving funds management: Funds excess to requirements" and an increase of $15 million for "Program increase: Advanced thermal and power technology for improved DEW [directed energy weapon] SWAP [space, weight, and power?]." (Page 186) The impact, if any, of these recommended funding changes on the three projects in **Table 1** that are funded through line 27 is not clear, which is why the funding figures in the SAC column of **Table 1** for these three projects are shown with question marks.

The recommended reduction of $3.186 million for project 3401 in line 69 is for "Restoring acquisition accountability: Project 3401 lack of acquisition strategy." (Page 187)

Regarding additional recommended funding not reflected in **Table 1**, S.Rept. 116-103 states (emphasis added):

> *Surface Navy Laser Weapon System*.—The fiscal year 2020 President's budget request includes $89,234,000 in [line 72 of] Research, Development, Test and Evaluation, Navy for further development, integration and test of one Surface Navy Laser Weapon System [SNLWS] Increment I unit onto a DDG 51 class Flight IIA destroyer in fiscal year 2021. Further, the Chief of Naval Operations submitted a fiscal year 2020 unfunded requirement of $80,000,000 in Other Procurement, Navy for the procurement and installation of one additional SNLWS unit.
>
> **The Committee recommends $65,000,000 in [the] Other Procurement, Navy [account] for the procurement of one additional SNLWS unit in fiscal year 2020** and directs that

> none of the funds may be obligated or expended until thirty days after the Assistant Secretary of the Navy (Research, Development and Acquisition) provides a briefing to the congressional defense committees detailing the results of the Critical Design Review for SNLWS Increment I as well as the acquisition strategy for future SNLWS increments and other Navy Laser Family of Systems programs. Further, the Assistant Secretary of the Navy (Financial Management and Comptroller) is directed to certify to the congressional defense committees with submission of the fiscal year 2021 President's budget request full funding for the first SNLWS production laser weapon system, Government-furnished equipment, Government-furnished information, engineering, support costs and installation. Finally, the Director, Operational Test and Evaluation, is directed to certify to the congressional defense committees, not later than with submission of the fiscal year 2021 President's budget request, appropriate execution of the previously agreed-to test approach for SNLWS. (Page 193)

S.Rept. 116-103 also states:

> *Talent and Technology for Navy Power and Energy Systems*.—The Committee has supported the Navy's investment in next-generation combat systems such as directed energy weapons. While directed energy weapons are part of a strategy to maintain military technological advantage, they also create new energy challenges for the ships and submarines deploying them. Therefore, the Committee recommends an increase of $9,500,000 for a combination of workforce talent and technology development efforts in support of Navy power and energy systems, such as bridge-to-university programs for underprepared university enrollees and digital twin research. (Page 198)

# Appendix. Potential Advantages and Limitations of Shipboard Lasers

This appendix presents additional information on potential advantages and limitations of shipboard lasers.

## Potential Advantages

In addition to a low marginal cost per shot and deep magazine, potential advantages of shipboard lasers include the following:

- **Fast engagement times.** Light from a laser beam can reach a target almost instantly (eliminating the need to calculate an intercept course, as there is with interceptor missiles) and, by remaining focused on a particular spot on the target, cause disabling damage to the target within seconds. After disabling one target, a laser can be redirected in several seconds to another target.
- **Ability to counter radically maneuvering missiles.** Lasers can follow and maintain their beam on radically maneuvering missiles that might stress the maneuvering capabilities of Navy SAMs.
- **Precision engagements.** Lasers are precision-engagement weapons—the light spot from a laser, which might be several inches in diameter, affects what it hits, while generally not affecting (at least not directly) separate nearby objects.
- **Graduated responses.** Lasers can perform functions other than destroying targets, including detecting and monitoring targets and producing nonlethal effects, including reversible jamming of electro-optic (EO) sensors. Lasers offer the potential for graduated responses that range from warning targets to reversibly jamming their systems, to causing limited but not disabling damage (as a further warning), and then finally causing disabling damage.

## Potential Limitations

Potential limitations of shipboard lasers include the following:

- **Line of sight.** Since laser light tends to fly through the atmosphere on an essentially straight path, shipboard lasers would be limited to line-of-sight engagements, and consequently could not counter over-the-horizon targets or targets that are obscured by intervening objects. This limits in particular potential engagement ranges against small boats, which can be obscured by higher waves, or low-flying targets. Even so, lasers can rapidly reacquire boats obscured by periodic swells.
- **Atmospheric absorption, scattering, and turbulence.** Substances in the atmosphere—particularly water vapor, but also things such as sand, dust, salt particles, smoke, and other air pollution—absorb and scatter light from a shipboard laser, and atmospheric turbulence can defocus a laser beam. These effects can reduce the effective range of a laser. Absorption by water vapor is a particular consideration for shipboard lasers because marine environments feature substantial amounts of water vapor in the air. There are certain wavelengths of light (i.e., “sweet spots” in the electromagnetic spectrum) where atmospheric absorption by water vapor is markedly reduced. Lasers can be

designed to emit light at or near those sweet spots, so as to maximize their potential effectiveness. Absorption generally grows with distance to target, making it in general less of a potential problem for short-range operations than for longer-range operations. Adaptive optics, which make rapid, fine adjustments to a laser beam on a continuous basis in response to observed turbulence, can counteract the effects of atmospheric turbulence. Even so, lasers might not work well, or at all, in rain or fog, preventing lasers from being an all-weather solution.

- **Thermal blooming.** A laser that continues firing in the same exact direction for a certain amount of time can heat up the air it is passing through, which in turn can defocus the laser beam, reducing its ability to disable the intended target. This effect, called thermal blooming, can make lasers less effective for countering targets that are coming straight at the ship, on a constant bearing (i.e., "down-the-throat" shots). Other ship self-defense systems, such as interceptor missiles or a CIWS, might be more suitable for countering such targets. Most tests of laser systems have been against crossing targets rather than "down-the-throat" shots. In general, thermal blooming becomes more of a concern as the power of the laser beam increases.
- **Saturation attacks.** Since a laser can attack only one target at a time, requires several seconds to disable it, and several more seconds to be redirected to the next target, a laser can disable only so many targets within a given period of time. This places an upper limit on the ability of an individual laser to deal with saturation attacks—attacks by multiple weapons that approach the ship simultaneously or within a few seconds of one another. This limitation can be mitigated by installing more than one laser on the ship, similar to how the Navy installs multiple CIWS systems on certain ships.
- **Hardened targets and countermeasures.** Less-powerful lasers—that is, lasers with beam powers measured in kilowatts (kW) rather than megawatts (MW)—can have less effectiveness against targets that incorporate shielding, ablative material, or highly reflective surfaces, or that rotate rapidly (so that the laser spot does not remain continuously on a single location on the target's surface) or tumble. Small boats (or other units) could employ smoke or other obscurants to reduce their susceptibility to laser attack.[65] Measures such as these, however, can increase the cost and/or weight of a weapon, and obscurants could make it more difficult for small boat operators to see what is around them, reducing their ability to use their boats effectively.

[65] See, for example, "Kelsey D. Atherton, "China Plans To Defeat American Lasers With Smoke," *Popular Science*, May 3, 2016.

- **Risk of collateral damage to aircraft, satellites, and human eyesight.** Since light from an upward-pointing laser that does not hit the target would continue flying upward in a straight line, it could pose a risk of causing unwanted collateral damage to aircraft and satellites. The light emitted by SSLs being developed by the Navy is of a frequency that can cause permanent damage to human eyesight, including blinding. Blinding can occur at ranges much greater than ranges for damaging targeted objects. Scattering of laser light off the target or off fog or particulates in the air can pose a risk to exposed eyes.[66]

For additional background information on potential Navy shipboard SSLs, see CRS Report R41526, *Navy Shipboard Lasers for Surface, Air, and Missile Defense: Background and Issues for Congress*, by Ronald O'Rourke.

[66] The United States in 1995 ratified the 1980 Convention on Prohibitions or Restriction on the Use of Certain Conventional Weapons Which May be Deemed to be Excessively Injurious or to Have Indiscriminate Effects. An international review of the convention began in 1994 and concluded in May 1996 with the adoption of, among other things, a new Protocol IV on blinding laser weapons. The protocol prohibits the employment of lasers that are specifically designed to cause permanent blindness to the naked eye or to the eye with corrective eyesight devices. The United States ratified Protocol IV on December 23, 2008, and it entered into force for the United States on July 21, 2009. DOD views the protocol as fully consistent with DOD policy. DOD believes the lasers discussed in this report are consistent with DOD policy of prohibiting the use of lasers specifically designed to cause permanent blindness to the naked eye or to the eye with corrective eyesight devices. For further discussion, see Appendix I ("Protocol on Blinding Lasers") in CRS Report R41526, *Navy Shipboard Lasers for Surface, Air, and Missile Defense: Background and Issues for Congress*, by Ronald O'Rourke.

## Author Information

Ronald O'Rourke
Specialist in Naval Affairs

## Disclaimer

This document was prepared by the Congressional Research Service (CRS). CRS serves as nonpartisan shared staff to congressional committees and Members of Congress. It operates solely at the behest of and under the direction of Congress. Information in a CRS Report should not be relied upon for purposes other than public understanding of information that has been provided by CRS to Members of Congress in connection with CRS's institutional role. CRS Reports, as a work of the United States Government, are not subject to copyright protection in the United States. Any CRS Report may be reproduced and distributed in its entirety without permission from CRS. However, as a CRS Report may include copyrighted images or material from a third party, you may need to obtain the permission of the copyright holder if you wish to copy or otherwise use copyrighted material.