Congressional Research Service
Informing the legislative debate since 1914

Navy Lasers, Railgun, and Gun-Launched Guided Projectile: Background and Issues for Congress

Updated August 1, 2018

Congressional Research Service
https://crsreports.congress.gov
R44175

CRS REPORT
Prepared for Members and
Committees of Congress

Summary

The Navy is developing three new ship-based weapons that could improve the ability of Navy surface ships to defend themselves against missiles, unmanned aerial vehicles (UAVs), and surface craft: the Surface Navy Laser Weapon System (SNLWS), the electromagnetic railgun (EMRG), and the gun-launched guided projectile (GLGP), previously known as the hypervelocity projectile (HVP).

The Navy refers to the initial (i.e., Increment 1) version of SNLWS as HELIOS, an acronym meaning high-energy laser with integrated optical dazzler and surveillance. EMRG could additionally provide the Navy with a new naval surface fire support (NSFS) weapon for attacking land targets in support of Marines or other friendly ground forces ashore. The Department of Defense is exploring the potential for using GLGP across multiple U.S. military services.

Any one of these three new weapons, if successfully developed and deployed, might be regarded as a "game changer" for defending Navy surface ships against enemy missiles and UAVs. If two or three of them are successfully developed and deployed, the result might be considered not just a game changer, but a revolution. Rarely has the Navy had so many potential new types of surface-ship air-defense weapons simultaneously available for development and potential deployment.

Although the Navy in recent years has made considerable progress in developing technologies for these new weapons, a number of significant development challenges remain. Overcoming these challenges will require additional development work, and ultimate success in overcoming them is not guaranteed.

The issue for Congress is whether to approve, reject, or modify the Navy's funding requests and proposed acquisition strategies for these three potential new weapons. Potential oversight questions for Congress include the following:

- Using currently available air-defense weapons, how well could Navy surface ships defend themselves in a combat scenario against an adversary such as China that has or could have large numbers of missiles and UAVs? How would this situation change if Navy surface ships in coming years were equipped with SNLWS, EMRG, GLGP, or some combination of these systems?
- How significant are the remaining development challenges for SNLWS, EMRG, and GLGP? Are current schedules for developing SNLWS, EMRG, and GLGP appropriate in relation to remaining development challenges and projected improvements in enemy missiles and UAVs?
- When does the Navy anticipate issuing roadmaps detailing its plans for procuring and installing production versions of SNLWS, EMRG, and GLGP on specific Navy ships by specific dates?
- Will the kinds of surface ships that the Navy plans to procure in coming years have sufficient space, weight, electrical power, and cooling capability to take full advantage of SNLWS and EMRG? What changes, if any, would need to be made in Navy plans for procuring large surface combatants (i.e., destroyers and cruisers) or other Navy ships to take full advantage of SNLWS and EMRGs?
- Given the Navy's interest in HPV, how committed is the Navy to completing the development of EMRG and eventually deploying EMRGs on Navy ships?
- Are the funding line items for SNLWS, EMRG, and GLDP sufficiently visible for supporting congressional oversight?

Contents

Introduction 1
Issue for Congress 1
Scope of Report 1
Background 2
Strategic and Budgetary Context 2
Concern About Survivability of Navy Surface Ships 2
Depth of Magazine and Cost Exchange Ratio 3
SNLWS, EMRG, and GLGP in Brief 4
Surface Navy Laser Weapon System (SNLWS) 4
Electromagnetic Railgun (EMRG) 11
Gun-Launched Guided Projectile (GLGP) 15
Remaining Development Challenges 24
Solid-State Lasers (SSLs) 25
EMRG and GLGP 26
Transitioning from Development to Procurement 27
Issues for Congress 27
Potential Oversight Questions 27
Legislative Activity for FY2019 28
Summary of Congressional Action on FY2019 Funding 28
National Defense Authorization Act for Fiscal Year 2019/John S. McCain National Defense Authorization Act for Fiscal Year 2019 (H.R. 5515/S. 2987) 29
House 29
Senate 29
Conference 33
FY2019 DOD Appropriations Act (H.R. 6157/S. 3159) 35
House 35
Senate 35

Figures

Figure 1. Laser Weapon System (LaWS) on USS *Ponce* 6
Figure 2. Laser Weapon System (LaWS) on USS *Ponce* 6
Figure 3. ONR Graphic of SSL-TM Laser System 8
Figure 4. HELIOS System on DDG-51 Destroyer 9
Figure 5. HELIOS System on DDG-51 Destroyer 10
Figure 6. Industry-Built EMRG Prototype Demonstrator 12
Figure 7. Industry-Built EMRG Prototype Demonstrator 13
Figure 8. Photograph Showing HVP 16
Figure 9. HVP 18
Figure 10. HVP Launch Packages 19
Figure 11. HVP Application to Various Launchers 20
Figure 12. Navy Slide Depicting HVP Operations Against Various Target Types 21

Tables

Table 1. Summary of Congressional Action on FY2019 Funding..... 28

Appendixes

Appendix. Potential Advantages and Limitations of Shipboard Lasers 37

Contacts

Author Information..... 39

Introduction

Issue for Congress

This report provides background information and issues for Congress on three new ship-based weapons the Navy is developing that could improve the ability of Navy surface ships to defend themselves against missiles, unmanned aerial vehicles (UAVs), and surface craft: the Surface Navy Laser Weapon System (SNLWS), the electromagnetic railgun (EMRG), and the gun-launched guided projectile (GLGP), previously known as the hypervelocity projectile (HVP).[1] The Navy refers to the initial (i.e., Increment 1) version of SNLWS as HELIOS, an acronym meaning high-energy laser with integrated optical dazzler and surveillance.

Any one of these three new weapons, if successfully developed and deployed, might be regarded as a "game changer" for defending Navy surface ships against enemy missiles and UAVs. If two or three of them are successfully developed and deployed, the result might be considered not just a game changer, but a revolution. Rarely has the Navy had so many potential new types of surface-ship air-defense weapons simultaneously available for development and potential deployment.

The issue for Congress is whether to approve, reject, or modify the Navy's funding requests and proposed acquisition strategies for these three potential new weapons. Congress's decisions on this issue could affect future Navy capabilities and funding requirements and the defense industrial base.

For an overview of the strategic and budgetary context in which the programs covered in this report and other Navy programs may be considered, see CRS Report RL32665, *Navy Force Structure and Shipbuilding Plans: Background and Issues for Congress*, by Ronald O'Rourke.[2]

Scope of Report

High-energy lasers (HELs) and railguns are being developed by multiple parts of the Department of Defense (DOD), not just the Navy.[3] HELs, railguns, and GLGP have potential application to military aircraft and ground forces equipment, not just surface ships. And SNLWS, EMRG, and GLGP could be used for performing missions other than defense against missiles, UAVs, and surface craft. In particular for the Navy and Marine Corps, EMRG could provide the Navy with a new naval surface fire support (NSFS) weapon for attacking land targets in support of Marines or other friendly ground forces ashore. (NSFS, in fact, was the originally envisaged mission for EMRG.) This report focuses on Navy efforts to develop SNLWS, EMRG, and GLGP for potential use in defending Navy surface ships against missiles and UAVs. It supersedes an earlier CRS report that provided an introduction to potential Navy shipboard lasers.[4]

---

[1] Railgun is also spelled as rail gun; EMRG is also abbreviated as EM railgun.

[2] See also CRS Report R43838, *A Shift in the International Security Environment: Potential Implications for Defense—Issues for Congress*, by Ronald O'Rourke, and CRS Report R44891, *U.S. Role in the World: Background and Issues for Congress*, by Ronald O'Rourke and Michael Moodie.

[3] For a discussion of Army laser development programs, see CRS Report R45098, *U.S. Army Weapons-Related Directed Energy (DE) Programs: Background and Potential Issues for Congress*, by Andrew Feickert. See also Tyler Rogoway, "U.S. Army Forges Ahead With Its Railgun As Navy's Commitment To The Tech Is Questioned," *The Drive*, March 20, 2018.

[4] CRS Report R41526, *Navy Shipboard Lasers for Surface, Air, and Missile Defense: Background and Issues for*

Background

Strategic and Budgetary Context

Concern About Survivability of Navy Surface Ships

Although Navy surface ships have a number of means for defending themselves against missiles and UAVs,[5] some observers are concerned about the survivability of Navy surface ships in potential combat situations against adversaries, such as China, that are armed with large numbers of missiles, including advanced models, and large numbers of UAVs.[6] Concern about this issue has led some observers to conclude that the Navy's surface fleet in coming years might need to avoid operating in waters that are within range of these weapons, or that the Navy might need to move toward a different fleet architecture that relies less on larger surface ships and more on smaller surface ships and submarines.

Navy surface fleet leaders in early 2015 announced a new organizing concept for the Navy's surface fleet called distributed lethality.[7] Under distributed lethality, offensive weapons such as anti-ship cruise missiles (ASCMs) are to be distributed across a wider array of Navy surface ships, and new operational concepts for Navy surface ship formations are to be implemented. The aim of distributed lethality is to boost the surface fleet's capability for attacking enemy ships and make it less possible for an enemy to cripple the U.S. fleet by concentrating its attacks on a few very-high-value Navy surface ships (particularly the Navy's aircraft carriers). Perspectives on whether it would be cost effective to spend money spreading offensive weapons across a wider array of Navy surface ships might be influenced by views on whether those surface ships can adequately defend themselves against enemy missiles and UAVs.

Congress, by Ronald O'Rourke. This earlier CRS report has been archived and remains available as a supplementary reference source on potential Navy shipboard lasers.

[5] These include the following: operating ships in ways that make it hard for others to detect and accurately track Navy ships; jamming or destroying enemy targeting sensors; interfering with the transmission of targeting data from sensors to weapon launchers; attacking missile launchers (which can be land-based launchers, ships, submarines, or aircraft); and countering missiles and UAVs headed toward Navy ships. Navy measures for countering missiles and UAVs headed toward Navy ships include the following: jamming a missile's or UAV's sensor or guidance system; using decoys of various kinds to lure enemy missiles away from Navy ships; and shooting down enemy missiles and UAVs with surface-to-air missiles and the Phalanx Close-In Weapon System (CIWS), which is essentially a radar-controlled Gatling gun. Employing all these measures reflects a long-standing Navy approach of creating a multi-layered defense against enemy missiles, and of attacking the enemy's "kill chain" at multiple points so as to increase the chances of breaking the chain. (The kill chain is the sequence of steps that an enemy must complete to conduct a successful missile attack on a Navy ship. Interfering with any step in the sequence can break the kill chain and thereby prevent or defeat the attack.)

[6] For more on China's anti-ship missiles and UAVs, see CRS Report RL33153, *China Naval Modernization: Implications for U.S. Navy Capabilities—Background and Issues for Congress*, by Ronald O'Rourke. Enemy missiles are not the only reasons that some observers are concerned about the future survivability of U.S. Navy surface ships in combat situations; observers are also concerned about threats to U.S. Navy surface ships posed by small boats, mines, and torpedoes.

[7] See, for example, Thomas Rowden, Peter Gumataotao, and Peter Fanta, "Distributed Lethality," *U.S. Naval Institute Proceedings*, January 2015: 18-23.

Depth of Magazine and Cost Exchange Ratio

Two key limitations that Navy surface ships currently have in defending themselves against missiles and UAVs are limited depth of magazine and unfavorable cost exchange ratios. Limited depth of magazine refers to the fact that Navy surface ships can use surface-to-air missiles (SAMs) and their Close-in Weapon System (CIWS) Gatling guns to shoot down only a certain number of enemy missiles and UAVs before running out of SAMs and CIWS ammunition[8]—a situation (sometimes called "going Winchester") that can require a ship to withdraw from battle, spend time travelling to a safe reloading location (which can be hundreds of miles away),[9] and then spend more time traveling back to the battle area.

Unfavorable cost exchange ratios refer to the fact that a SAM used to shoot down a missile or UAV can cost the Navy more (perhaps much more) to procure than it cost the adversary to build or acquire the missile or UAV. In the FY2019 defense budget, procurement costs for Navy air-defense missiles range from about $800,000 per missile to a few million dollars per missile, depending on the type.[10]

In combat scenarios against an adversary with a limited number of missiles or UAVs, an unfavorable cost exchange ratio can be acceptable because it saves the lives of Navy sailors and prevents very expensive damage to Navy ships. But in combat scenarios (or an ongoing military capabilities competition) against a country such as China that has many missiles and UAVs and a capacity for building or acquiring many more, an unfavorable cost exchange ratio can become a very expensive—and potentially unaffordable—approach to defending Navy surface ships against missiles and UAVs, particularly in a context of constraints on U.S. defense spending and competing demands for finite U.S. defense funds.

SNLWS, EMRG, and GLGP offer a potential for dramatically improving depth of magazine and the cost exchange ratio:

- **Depth of magazine.** Solid-state lasers (SSLs) such as SNLWS are electrically powered, drawing their power from the ship's overall electrical supply, and can be fired over and over, indefinitely, as long as the laser continues to work and the ship has fuel to generate electricity. EMRG's projectile and GLGP (which might be one and the same—see next section) can be stored by the hundreds in a Navy surface ship's weapon magazine.
- **Cost exchange ratio.** An SSL can be fired for a marginal cost of less than one dollar per shot (which is the cost of the fuel needed to generate the electricity

[8] Navy cruisers have 122 missile cells; Navy destroyers have 90 or 96 missile cells. Some of these cells are used for storing and launching Tomahawk land attack cruise missiles or anti-submarine rockets. The remainder are available for storing and launching SAMs. A Navy cruiser or destroyer might thus be armed with a few dozen or several dozen SAMs for countering missiles and UAVs. Countering missiles and UAVs with SAMs might sometimes require shooting two SAMs at each enemy missile.

[9] The missile cells on a Navy cruiser or destroyers are clustered together in an installation called a Vertical Launch System (VLS). VLS cells cannot be reloaded while the ship is underway; a ship needs to return to a port or a calm anchorage to reload its VLS.

[10] Unit procurement costs for ship-launched air-defense missiles in the FY2019 are as follows: about $802,000 for the Rolling Airframe Missile (RAM), about $2.2 million for the modification of an existing Evolved Sea Sparrow Missile (ESSM), and about $3.9 million for the SM-6 Block 1 missile. RAM and ESSM are short-range missiles for defense against aircraft and ASCMs. The SM-6 Block 1 is a medium-range missile used for both defense against aircraft and ASCMs, and terminal (i.e., endo-atmospheric) defense against ASBMs.

used in the shot), while GLGP has an estimated unit procurement cost of about $85,000.[11]

High-energy SSLs currently under development that have enough beam power to counter small boats and UAVs, but not enough to counter missiles, could nevertheless indirectly improve a ship's ability to counter missiles by permitting the ship to use fewer of its SAMs for countering UAVs, and more of them for countering missiles. Similarly, even though GLGPs fired from 5-inch powder guns might not be able to counter anti-ship ballistic missiles (ASBMs), they could indirectly improve a ship's ability to counter ASBMs by permitting the ship to use fewer of its SAMs for countering ASCMs and more of its SAMs for countering ASBMs.

SNLWS, EMRG, and GLGP in Brief

Surface Navy Laser Weapon System (SNLWS)

SSLs in General

The Navy in recent years has leveraged both significant advancements in industrial SSLs and decades of research and development work on military lasers done by other parts of DOD to make substantial progress toward deploying high-energy SSLs on Navy surface ships.[12] Navy surface ships would use high-energy SSLs initially for jamming or confusing (i.e., "dazzling") intelligence, surveillance, and reconnaissance (ISR) sensors, for countering small boats and UAVs, and potentially in the future for countering enemy missiles as well. High-energy SSLs on Navy ships would generally be short-range defensive weapons—they would generally counter targets at ranges of about one mile to perhaps eventually a few miles.

In addition to a low marginal cost per shot and deep magazine, potential advantages of shipboard lasers include fast engagement times, an ability to counter radically maneuvering missiles, an ability to conduct precision engagements, and an ability to use lasers for graduated responses ranging from detecting and monitoring targets to causing disabling damage. Potential limitations of shipboard lasers relate to line of sight; atmospheric absorption, scattering, and turbulence (which prevent shipboard lasers from being all-weather weapons); an effect known as thermal blooming that can reduce laser effectiveness; countering saturation attacks; possible adversary use of hardened targets and countermeasures; and risk of collateral damage, including damage to aircraft and satellites and permanent damage to human eyesight, including blinding. These potential advantages and limitations are discussed in greater detail in the **Appendix**.

Key Developments with LaWS and MLD from 2009 to 2017

Key developments in the Navy's high-energy SSL development effort from 2009 to 2017 include the following:

[11] Sources for cost figure for GLGP: Sydney J. Freedberg Jr., "$86,000 + 5,600 MPH = Hyper Velocity Missile Defense," *Breaking Defense*, January 26, 2018; Jared Keller, "The U.S. Military Has a New 'Bullet' That Attacks At Mach Six (with 100 Mile Range)," *National Interest*, February 3, 2018.

[12] In discussions of potential Navy shipboard lasers, a high-energy laser is generally considered to be a laser with a beam power of at least 10 kilowatts (kW). In addition to developing SLs, the Navy has also performed research and development work on a different kind of laser, called the free electron laser (FEL). For background information on the FEL, see CRS Report R41526, *Navy Shipboard Lasers for Surface, Air, and Missile Defense: Background and Issues for Congress*, by Ronald O'Rourke.

- Between 2009 and 2012, the Navy successfully tested a prototype SSL called the Laser Weapon System (LaWS) against UAVs in a series of engagements that took place initially on land and subsequently on a Navy ship at sea. LaWS had a reported beam power of 30 kilowatts (kW).[13]
- Between 2010 and 2011, the Navy tested another prototype SSL called the Maritime Laser Demonstration (MLD) in a series of tests that culminated with an MLD installed on a Navy ship successfully engaging a small boat.
- In August 2014, the Navy installed LaWS on the USS *Ponce* (pronounced pon-SAY)—a converted amphibious ship that operated in the Persian Gulf as an interim Afloat Forward Staging Base (AFSB[I])[14]—to conduct evaluation of shipboard lasers in an operational setting against swarming boats and swarming UAVs (**Figure 1** and **Figure 2**).
- In December 2014, the Navy declared LaWS on the *Ponce* to be an "operational" system.[15] *Ponce* remained in the Persian Gulf until it was relieved in September 2017 by its replacement, the new-construction Expeditionary Sea Base ship *Lewis B. Puller* (ESB-3). *Ponce* returned to the United States and was decommissioned in October 2017, at which point LaWS was removed from Ponce. LaWS is to be refurbished to serve as a land-based test asset for the HELIOS effort discussed below.[16]

[13] See, for example, Mike McCarthy, "Navy Authorized To Use Ship-Based Laser In Battle," *Defense Daily*, December 11, 2014: 3.

[14] As an interim AFSB, *Ponce* operated in the Persian Gulf as a "mother ship" for Navy helicopter and small boat operations. Ships referred to as AFSBs are now referred to as Expeditionary Sea Base ships (ESBs).

[15] Mike McCarthy, "Navy Authorized To Use Ship-Based Laser In Battle," *Defense Daily*, December 11, 2014: 3; Sam LaGrone, "U.S. Navy Allowed to Use Persian Gulf Laser for Defense," *USNI News*, December 10, 2014; Philip Ewing, "Navy Declares Laser Weapon 'Operational,'" *Politico Pro (Pro Defense Report)*, December 10, 2014; Statement of Rear Admiral Mathias W. Winter, United States Navy, Chief of Naval Research, Before the Emerging Threats and Capabilities Subcommittee of the House Armed Services Committee on The Fiscal Year 2017 Budget Request, February 24, 2016, p. 15.

[16] Source: Navy briefing to CRS and the Congressional Budget Office (CBO) on SNLWS program, April 27, 2018. For additional discussion of LaWS, see U.S. Navy, *U.S. Navy Program Guide 2017*, pp. 180-181, which refers to LaWS as the SSL-QRC (solid state laser—quick reaction capability).

Figure 1. Laser Weapon System (LaWS) on USS *Ponce*

Source: Navy photograph dated November 16, 2014, accompanying David Smalley, "Historic Leap: Navy Shipboard Laser Operates in Arabian Gulf," *Navy News Service*, December 10, 2014, accessed August 12, 2015, at http://www.navy.mil/list_all.asp?id=84805.

Figure 2. Laser Weapon System (LaWS) on USS *Ponce*

Source: Navy photograph dated November 17, 2014, accompanying David Smalley, "Historic Leap: Navy Shipboard Laser Operates in Arabian Gulf," *Navy News Service*, December 10, 2014, accessed August 12, 2015, at http://www.navy.mil/list_all.asp?id=84805.

SSL Technology Maturation (SSL-TM) Program

As a follow-on effort to LaWS and MLD, the Navy initiated the SSL Technology Maturation (SSL-TM) program, in which industry teams led by BAE Systems, Northrop Grumman, and Raytheon, among others, competed to develop a shipboard laser with a beam power of 100 kW to 150 kW, which would provide increased effectiveness against small boats and UAVs.[17] Technology developed in the SSL-TM effort will support development of the SNLWS Increment 2 system (see discussion below).

On October 22, 2015, DOD announced that it had selected Northrop Grumman as the winner of the SSL-TM competition.[18] **Figure 3** is an Office of Naval Research (ONR) graphic illustration of the SSL-TM system and its components as installed on the Navy's Self Defense Test Ship (the USS *Paul F. Foster* [DD-964], an old Spruance [DD-963] class destroyer).[19] In January 2018, the Navy announced that it intends to install the SSL-TM laser on the newly built amphibious ship USS *Portland* (LPD-27).[20]

[17] For more on the SSL-TM program, see Office of Naval Research, "Solid-State Laser Technology Maturation Program," accessed August 11, 2015, at http://www.onr.navy.mil/Media-Center/Fact-Sheets/Solid-State-Laser-Technology-Maturation-Program.aspx; Office of Naval Research, "Solid State Laser Technology Maturation Program," September 2012, accessed August 11, 2015, at http://www.onr.navy.mil/~/media/Files/Fact-Sheets/35/Solid-State-Laser-Technology-Maturation-Program-2012-a.ashx; Office of Naval Research, "Research and Development/Technology Maturation of Solid State High Power Laser Weapon Systems, Subsystems, and/or Components for Surface Navy, USN, Broad Agency Announcement (BAA)," ONR BAA # 12-019, 2012, accessed August 11, 2015, at http://www.onr.navy.mil/~/media/files/funding-announcements/baa/2012/12-019.ashx; Future Force, "Developing a High-Energy Laser for the Navy," January 23, 2015, accessed August 11, 2015, at http://futureforce.navylive.dodlive.mil/2015/01/high-energy-laser/.

Boosting beam power further—to something between 150 kW and 300 kW—could permit a laser to counter at least some ASCMs. Even stronger beam powers—on the order of at several hundred kW, if not one megawatt [MW] or more—could improve a laser's effectiveness against ASCMs and perhaps enable it to counter ASBMs. (For additional discussion, see CRS Report R41526, *Navy Shipboard Lasers for Surface, Air, and Missile Defense: Background and Issues for Congress*, by Ronald O'Rourke, particularly the section entitled "Required Laser Power Levels for Countering Targets" and Appendix A on "Laser Power Levels Required to Counter Targets.")

[18] DOD contract award announcements for October 22, 2015, accessed December 18, 2015, at: http://www.defense.gov/News/Contracts/Contract-View/Article/625630. See also "US Navy Selects Northrop Grumman to Design and Produce Shipboard Laser Weapon System Demonstrator," December 22, 2015, accessed March 18, 2016, at: http://www.globenewswire.com/newsarchive/noc/press/pages/news_releases.html?d=10158731. See also Richard Scott, "Northrop Grumman To Build on MLD for SSL Demonstrator," *IHS Jane's International Defence Review*, February 2016: 5; Michael Fabey and Kris Osborn, "Navy to Fire 150Kw Ship Laser Weapon From Destroyers, Carriers," *Scout Warrior*, January 23, 2017.

[19] For additional discussion of SSL-TM, see U.S. Navy, *U.S. Navy Program Guide 2017*, pp. 180-181.

[20] Megan Eckstein, "LPD Portland Will Host ONR Laser Weapon Demonstrator, Serve as RIMPAC 2018 Flagship," *USNI News*, January 10, 2018; Richard Abott, "Next Navy Amphib Will Feature Laser Weapon Demo, Chosen As Flagship For RIMPAC 2018," *Defense Daily*, January 11, 2018.

Figure 3. ONR Graphic of SSL-TM Laser System

Artist's rendering

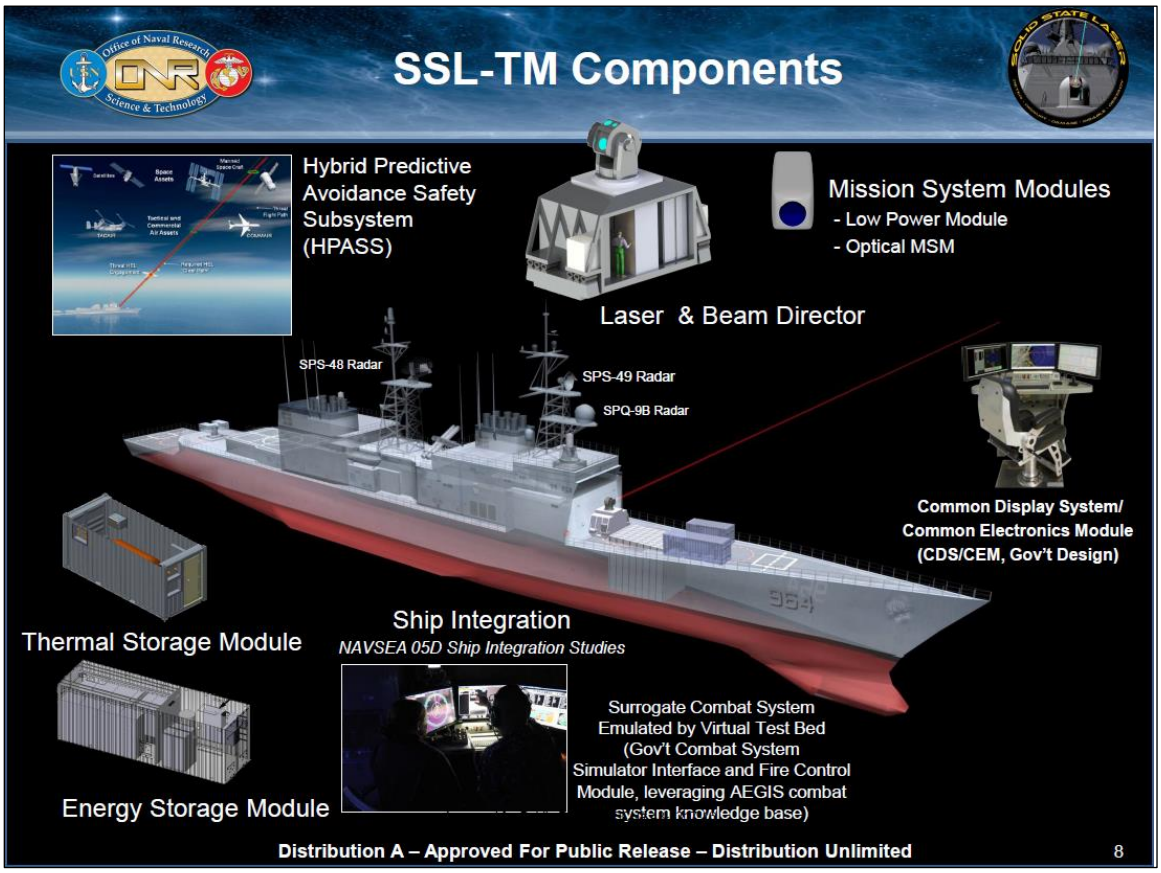

Source: Slide from February 2016 ONR briefing to CRS on SSL-TM program, received from Navy Office of Legislative Affairs February 26, 2016.

SNLWS Increment 1 (HELIOS)

The initial (i.e., Increment 1) version of the Navy's Surface Navy Laser Weapon System (SNLWS) is called HELIOS, an acronym meaning high energy laser with integrated optical dazzler and surveillance. The HELIOS effort is focused on rapid development and rapid fielding of a 60 kW-class high-energy laser (with growth potential to 150 kW) and dazzler in an integrated weapon system, for use in countering UAVs, small boats, and ISR sensors, and for combat identification and battle damage assessment.

Following a full and open competition based on a request for proposals (RFP) released on June 18, 2017, the Navy on January 26, 2018, awarded Lockheed Martin a $150 million contract for the development, manufacture, and delivery of two HELIOS systems—one for installation on a Navy Arleigh Burke (DDG-51) class Aegis destroyer, the other for land-based testing—by FY2020.[21] The contract includes options for up to 14 additional HELIOS systems that if exercised

[21] See DOD contract awards for January 26, 2018 (Release No: CR-017-18, January 26, 2018); "Lockheed Gets $150m Contract to Install High Energy Laser on a Flight IIA DDG-51 destroyer," *NavalToday.com*, January 29, 2018; Kimberly Underwood, "Navy Selects Lockheed Martin to Deliver Laser Energy Weapon," *Signal*, January 30, 2018; Richard Scott, "Lockheed Martin to Develop HELIOS Laser Weapon for DDG 51 Flight IIA Destroyer," *Jane's Navy*

could increase the total value of the contract to $942.8 million.[22] The Navy's proposed FY2019 budget envisages exercising options for two additional HELIOS systems for installation on two additional DDG-51s. **Figure 4** and **Figure 5** show an artist's renderings of HELIOS installed on a DDG-51.

Figure 4. HELIOS System on DDG-51 Destroyer

Artist's rendering

Source: Lockheed Martin image taken from "Lockheed Martin Receives $150 Million Contract to Deliver Integrated High Energy Laser Weapon Systems to U.S. Navy," Lockheed Martin, March 1, 2018.

SNLWS Increment 2

Following SNLWS Increment 1, the Navy's high-energy SSL effort envisages a successor system, called SNLWS Increment 2, with increased beam power. Technology developed under the SSL-TM effort (see discussion above) will support development of SNLWS Increment 2.

International, January 30, 2018; "Lockheed Martin Receives $150 Million Contract to Deliver Integrated High Energy Laser Weapon Systems to U.S. Navy," Lockheed Martin, March 1, 2018; Sydney J. Freedberg Jr., "First Combat Laser For Navy Warship: Lockheed HELIOS," *Breaking Defense*, March 1, 2018; Jeff Hecht, "Lockheed Martin to Develop Laser Weapons for U.S. Navy Destroyers," *IEEE Spectrum*, March 2, 2018; Justin Bachman, "The Navy Wants a Laser to Blow Drones Out of the Sky," March 2, 2018.

[22] Richard Abott, "HELIOS Laser To Be First Fully Integrated On U.S. Ship," *Defense Daily*, March 5 2018: 10-12.

Figure 5. HELIOS System on DDG-51 Destroyer

Detail from artist's rendering

Source: Detail from Lockheed Martin image taken from "Lockheed Martin Receives $150 Million Contract to Deliver Integrated High Energy Laser Weapon Systems to U.S. Navy," Lockheed Martin, March 1, 2018.

SNLWS Increment 3

Following SNLWS Increment 2, the Navy's high-energy SSL effort envisages another successor system, called SNLWS Increment 3, with further increased beam power.

Directed Energy Roadmap

A July 28, 2015, press report stated the following:

> [Secretary of the Navy Ray] Mabus said he would release a DE [directed energy][23] roadmap this fall that "charts our course for research, development, and fielding of high power radio frequency weapons, lasers, and directed energy countermeasures. And I will follow it up with my guidance to the Program Objective Memorandum for [Fiscal Year 2018],[24] which, importantly, establishes a resource sponsor and a program of record."[25]

In January 2016, the Navy stated that it anticipated releasing a directed energy weapon roadmap in February 2016.[26] In March 2017, a DOD official said a directed energy roadmap (apparently

[23] Lasers and another class of weapons called high-power microwave (HPM) weapons are referred to collectively as directed-energy weapons because they achieve their effects by directing electromagnetic energy at their targets.

[24] The Program Objective Memorandum (POM) is an internal DOD document that guides the preparation of a budget for a particular fiscal year.

[25] Megan Eckstein, "Mabus: Adversaries Showing Interest in Directed Energy; Navy Needs to Move Faster," *USNI News*, July 28, 2015.

[26] Justin Doubleday, "Winter: Navy Directed-Energy Strategy To Be Released This Month," *Inside the Navy*, February 1, 2016.

one for all of DOD, not just the Navy) would likely be finished in early 2018.[27] As of May 10, 2018, such a roadmap had not been released.

Electromagnetic Railgun (EMRG)

The Navy since 2005 has been developing EMRG, a cannon that uses electricity rather than chemical propellants (i.e., gunpowder charges) to fire a projectile.[28] In EMRG, "magnetic fields created by high electrical currents accelerate a sliding metal conductor, or armature, between two rails to launch projectiles at [speeds of] 4,500 mph to 5,600 mph,"[29] or roughly Mach 5.9 to Mach 7.4 at sea level.[30] Like SSLs, EMRG draws its power from the ship's overall electrical supply.[31] The Navy originally began developing EMRG as a naval surface fire support (NSFS) weapon for supporting U.S. Marines operating ashore, but subsequently determined that the weapon also has potential for defending against missiles.[32] In response to Section 243 of the FY2012 National Defense Authorization Act (H.R. 1540/P.L. 112-81 of December 31, 2011), the Navy in September 2012 submitted to the congressional defense committees a report on the EMRG development effort.[33]

Following tests with early Navy-built EMRG prototypes, the Navy funded the development of two industry-built EMRG prototype demonstrators, one by BAE Systems and the other by General Atomics (see **Figure 6** and **Figure 7**). The two industry-built prototypes are designed to fire projectiles at energy levels of 20 to 32 megajoules,[34] which is enough to propel a projectile 50 to 100 nautical miles.[35] (Such ranges might refer to using the EMRG for NSFS missions. Intercepts of missiles and UAVs might take place at much shorter ranges.) The Navy began evaluating the two industry-built prototypes in 2012.

In January 2015, it was reported that the Navy was projecting that EMRG could become operational on a Navy ship between 2020 and 2025.[36] In April 2015, it was reported that the Navy

[27] Jacqueline Klimas, "Pentagon to Finish Directed Energy Roadmap by Early 2018," *Politico Pro Defense Whiteboard*, March 29, 2017.

[28] Because it uses electricity rather than a powder charge to accelerate the projectile, Navy officials sometimes refer to EMRG as a launcher rather than a gun or cannon.

[29] Grace Jean, "With a Bang, Navy Begins Tests on EM Railgun Prototype Launcher," Navy News Service, February 28, 2012, accessed August 12, 2015, at http://www.navy.mil/submit/display.asp?story_id=65577.

[30] The speed of sound in air (i.e., Mach 1), varies with altitude; at sea level, it is approximately 761 miles an hour. See, for example, the table entitled "Speed of Sound at Different Altitudes," accessed August 12, 2015, at http://www.fighter-planes.com/jetmach1.htm.

[31] Unlike SSLs, however, EMRG is not a directed energy weapon, because it achieves its effects by firing a physical projectile at the target, not by directing electromagnetic energy at the target. See also footnote 23.

[32] For an article discussing the use of EMRG in countering ASCMs and ASBMs, see Sam LaGrone, "Navy Wants Rail Guns to Fight Ballistic and Supersonic Missiles Says RFI," *USNI News*, January 5, 2015.

[33] U.S. Navy, *Electromagnetic Railgun System: Final Report to the Congressional Defense Committees*, August 2012, with cover letters dated September 18, 2012. For a press report discussing the Navy's report to Congress, see Dan Taylor, "Stackley: Navy Identifies Four Technical Hurdles To Railgun Development," *Inside the Navy*, November 19, 2012.

[34] The Navy states that "a megajoule is a measurement of energy associated with a mass traveling at a certain velocity. In simple terms, a one-ton vehicle moving at 100 mph equals a magajoule of energy." (Office of Naval Research Public Affairs, "Navy Sets New World Record with Electromagnetic Railgun Demonstration," *Navy News Service*, December 10, 2010, accessed August 12, 2015, at http://www.navy.mil/submit/display.asp?story_id=57690.)

[35] Grace Jean, "With a Bang, Navy Begins Tests on EM Railgun Prototype Launcher," Navy News Service, February 28, 2012, accessed August 12, 2015, at http://www.navy.mil/submit/display.asp?story_id=65577.

[36] Sam LaGrone, "Navy Wants Rail Guns to Fight Ballistic and Supersonic Missiles Says RFI," *USNI News*, January 5,

was considering installing an EMRG on a Zumwalt (DDG-1000) class destroyer by the mid-2020s.[37]

Figure 6. Industry-Built EMRG Prototype Demonstrator

BAE prototype

Source: Navy photograph dated July 8, 2014, associated with Office of Naval Research Public Affairs, "From Research to Railgun: Revolutionary Weapon at Future Force EXPO," *Navy News Service*, January 13, 2015, accessed August 12, 2015, at http://www.navy.mil/submit/display.asp?story_id=85166.

A February 27, 2017, press report stated that

> a new full and open competition is in the works for the railgun. While the Office of Naval Research and several companies will continue their development of the railgun and projectile, [Naval Sea Systems Command spokeswoman Christianne] Witten said the program office is planning to hold a new competition for the technologies prior to them entering the engineering and manufacturing development phase of the acquisition process, known as "milestone B."
>
> "The railgun acquisition program will avoid being 'locked in' to proprietary solutions for key system components," Witten wrote. "It is the Navy's objective to leverage the industry competition that ONR initially held for the subsystems of pulse power, barrel technology

2015.

[37] Sam LaGrone, "Navy Considering Railgun for Third Zumwalt Destroyer," *USNI News*, February 5, 2015 (updated February 11, 2015); Mike McCarthy, "Navy Aiming To Put Railgun On Third Zumwalt Destroyer," *Defense Daily*, February 6, 2015; Kris Osborn, "Navy Will Test its Electromagnetic Rail Gun aboard DDG 1000," *DefenseTech*, April 15, 2015. For more on Zumwalt-class destroyers, see CRS Report RL32109, *Navy DDG-51 and DDG-1000 Destroyer Programs: Background and Issues for Congress*, by Ronald O'Rourke.

maturation and projectiles. Another round of system full and open competition is planned at milestone B."[38]

Figure 7. Industry-Built EMRG Prototype Demonstrator

General Atomics prototype

Source: Navy photograph dated July 8, 2014, accessed August 12, 2015, at http://www.navy.mil/view_image.asp?id=180994.

A July 21, 2017, press report stated the following:

> The U.S. Office of Naval Research (ONR) is proceeding in its electromagnetic railgun research and expects to reach a capacity of 10 rounds per minute with a 32 Mega-Joule muzzle launch for each round, officials said Thursday [July 20].
>
> Dr. Thomas Beutner, department head of Code 35 in ONR's Naval Air Warfare and Weapons Department, told reporters that the railgun research is going well and has made several scientific advances....
>
> Tom Boucher, program officer at Code 35 said the ONR S&T program calls for a maturation of achieving 10 rounds per minute at 32 megajoules by fiscal year 2019. To reach that goal, ONR is building a series of barrels and incorporating lessons learned. They will achieve the full rep-rate and muzzle energy in 2018 and in 2019 demonstrate the longest life of a barrel at that muzzle energy.
>
> After reaching these goals the S&T portion of the program should be complete. Separately the Navy's Program Executive Office Integrated Warfare Systems (PEO IWS) will look at shipboard integration if the Navy decides to do that and that office will make any follow-on acquisition decisions, Boucher said....
>
> ONR's rep-rate composite launcher, which can repeat launches quicker than other test devices, will be able to achieve the 10 round-per-minute rate the program seeks by later this summer. ONR plans to gradually ramp up this launcher to higher rep-rate and energy levels through the end of the year, Beutner said.
>
> He also talked about how ONR has demonstrated the ability to use pulse power, having fired 5,000 pulse shots. For the rep-rate firing, ONR has to use a larger energy farm or

[38] Justin Doubleday, "Laser, Railgun Programs Transitioned to Navy Acquisition Offices," *Inside the Navy*, February 27, 2017.

> capacitor base resulting in pulse power using over one megajoule per cubic meter energy density.
>
> "That's an important scientific advance in terms of energy density in those capacitors, but even more important that's a size factor that will fit into the ships. Both crewed combatants and future combatants," Beutner said.[39]

A March 9, 2018, press report states the following:

> Following a flurry of reports in December predicting the Navy's $500 million electromagnetic railgun experiment was dead on arrival, the chief of Naval Operations told lawmakers this week that the death of the program was greatly exaggerated.
>
> "[We are] fully invested in railgun; we continue to test it," Adm. John Richardson told the House Appropriations subcommittee on defense during a Wednesday hearing on Navy and Marine Corps budget issues. "We've demonstrated it at lower firing rates and ... shorter ranges. Now we have to do the engineering to, sort of, crank it up and get it at the designated firing rates, at the 80- to 100-mile range."...
>
> Business Insider reported in December that the Pentagon's Strategic Capabilities office was shifting research efforts from the railgun, which uses electromagnetic energy to shoot large projectiles at speeds of up to 4,500 miles per hour, to broader high-velocity projectile study.
>
> The Navy has never acknowledged a loss of interest in railgun technology, however. Last July, officials with the Office of Naval Research told reporters that the power behind the gun would be increased to 32 megajoules over the summer, giving the weapon a range of 110 miles....

[39] Richard Abott, "Navy Railgun research To Reach 10 Rounds Per Minute In 2018," *Defense Daily*, July 21, 2017. See also Hope Hodge Seck, "The Navy's Railgun Will Get Faster, More Powerful This Summer," *DefenseTech*, July 21, 2017; Patrick Tucker, "The US Navy's Railgun Breakthrough Could Change Energy Storage," *Defense One*, August 2, 2017.

> While Richardson acknowledged the challenges and said Navy brass were "very conscious" of reported Chinese achievements in railgun technology,[40] he maintained the service was still invested in the program.[41]

Gun-Launched Guided Projectile (GLGP)

As the Navy was developing EMRG, it realized that the guided projectile being developed for EMRG, which weighs about 23 pounds,[42] could also be fired from 5-inch and 155mm powder

---

[40] Press reports starting in late January 2018 stated that China is developing an electromagnetic railgun, and has installed what observers speculate may be a prototype version of such a weapon on a Chinese amphibious ship. See Joseph Trevithick, "Is This Chinese Navy Ship Equipped With An Experimental Electromagnetic Railgun?" *The Drive*, January 31, 2018; Jeffrey Lin and P.W. Singer, "Looks Like China Just Installed A Railgun on A Warship, Beating the U.S. Navy to the Punch," *Popular Science*, February 1, 2018; Mike Yeo, "Photos Suggest China Is Prepping to Test A Electromagnetic Railgun at Sea," *Defense News*, February 1, 2018; Tyler Rogoway, "This Is Our Best View Yet Of China's Ship-Mounted Railgun Prototype," *The Drive*, February 1, 2018; Jared Keller, "Here's What We Know About China's Secretive Electromagnetic Railgun," *Task and Pur*pose, February 2, 2018; Tom O'Connor, "Did China Build World's First Railgun at Sea? Photos Show What Looks Like Powerful Electromagnetic Weapon on Warship," *Newsweek*, February 2, 2018; David Axe, "China's Navy Is Flexing Its New Railgun," *Motherboard (Vice)*, February 2, 2018; Sean Gallagher, "US Dropped Ball on Navy Railgun Development—Now China Is Picking It Up," *Arstechnica*, February 2, 2018; Marex (Maritime Executive), "China's Navy May Have World's First Ship-Mounted Railgun," *Maritime Executive*, February 2, 2018; Asia Times Staff, "Did China Just Win the Race to Install a Railgun on a Warship?" *Asia Times*, February 3, 2018; Tom McKay, "China May Be Testing a Ship-Mounted Railgun," *Gizmodo*, February 3, 2018; Brian Wang, "Is China Railgun a Sputnik Moment for the USA?" *Next Big Future*, February 4, 2018; "Chinese Warship Reportedly Equipped With Electromagnetic Railgun," *People's Daily Online*, February 5, 2018; Jamie Seidel, "China in World-First Deployment of Experimental Electromagnetic Rail 'Supergun' Aboard a Warship," *News.com.au*, February 6, 2018; Yang Sheng, "Reports Reveal Major Achievements in Chinese Naval Weaponry," *Global Times*, March 12, 2018; Asia Times Staff, "PLA Website Confirms Sea trial of Shipborne Railgun," *Asia Times*, March 14, 2018; Tom O'Connor, "China Says It Is Testing World's First Railgun at Sea, Confirming Leaked Photos of Electromagnetic Weapon," *Newsweek*, March 14, 2018; "Reports Reveal Sea Tests of Electromagnetic Railguns," *People's Daily Online*, March 16, 2018; Melodie Ha, "Does China's Navy Really Have a Railgun? (Or Is It a Hoax?)," *National Interest*, April 5, 2018; Amanda Macias, "US Intelligence Report: China Will Have the World's Most Powerful Naval Gun Ready for War by 2025," *CNBC*, June 21, 2018; Michael Peck, "China Could Have the World's Most Powerful Naval Gun by 2025," *National Interest*, July 4, 2018.

See also CRS Report RL33153, *China Naval Modernization: Implications for U.S. Navy Capabilities—Background and Issues for Congress*, by Ronald O'Rourke.

[41] Hope Hodge Seck, "Navy 'Fully Invested' in Futuristic Railgun, Top Officer Says," *Military.com*, March 9, 2018. See also Joseph Trevithick, "Depite What You've Heard, The Navy Isn't Ditching Its Railgun And Budget Docs Prove It," *The Drive*, February 14, 2018; Jared Keller, "The Navy's Electromagnetic Railgun Is Both Alive And Dead," *Task and Purpose*, February 16, 2018; Doug Tsuruoka, "The Navy Isn't Giving up on Its Deadly Railgun Yet," *National Interest*, February 22, 2018.

[42] The Navy states that HVP weighs 23 pounds. Source: David Martin, "Navy's Newest Weapon Kills at Seven Times the Speed of Sound," *CBS News (cbssnews.com)*, April 7, 2014.

BAE Systems states that HVP is 24 inches long and weighs 28 pounds, including a 15-pound payload. The total length and weight of an HVP launch package, BAE Systems states, is 26 inches and 40 pounds. BAE states that the maximum rate of fire for HVP is 20 rounds per minute from a Mk 45 5-inch gun, 10 rounds per minute from the 155mm gun on DDG-1000 class destroyers (called the Advanced Gun System, or AGS), and 6 rounds per minute from EMRG. HVP's firing range, BAE Systems states, is more than 40 nautical miles (when fired from a Mk 45 Mod 2 5-inch gun), more than 50 nautical miles (Mk 45 Mod 4 5-inch gun), more than 70 nautical miles (155mm gun on DDG-1000 class destroyers), and more than 100 nautical miles (EMRG). (BAE Systems, "Hypervelocity Projectile (HVP)," 2014, accessed August 14, 2015, at http://www.baesystems.com/download/BAES_178505/hyper-velocity-projectile-hvp-datasheet.)

In July 2015, the Navy issued a request for information (RFI) to industry for the fabrication of a prototype EMRG mount capable of handling an integrated launch weight package of 22 kg, or about 48.5 pounds. (RFI for Fabrication of Prototype Mount for Naval Railgun, Solicitation Number: N00024-15-R-4132, FedBizOpps.gov, July 29, 2015. See also Justin Doubleday, "Navy Developing Integrated Mount For Electromagnetic Railgun," *Inside the Navy*, July 31, 2015.)

guns. When fired from EMRG, the projectile reaches hypervelocity (i.e., Mach 5+) speeds, and thus came to be known as the hypervelocity projectile (HVP). When fired from a power gun, the projectile flies quickly, but not as quickly as it does when fired from EMRG. In addition, whereas the Navy's original concept was to use the EMRG projectile for both EMRG and powder guns—and might still decide to do that—the Navy now states that the high-speed projectile fired from powder guns might instead be a different projectile. For both of these reasons, the high-speed projectile for powder guns, which was originally called HVP, is now referred to by the Navy as the gun-launched guided projectile (GLGP). As noted earlier, GLGP has an estimated unit procurement cost of about $85,000.[43] **Figure 8** and **Figure 9** show the then-named HVP.

One advantage of GLGP is that the 5-inch and 155mm guns from which it would be fired are already installed on Navy cruisers and destroyers, creating a potential for rapidly proliferating GLGP through the cruiser-destroyer force, once development of GLGP is complete and the weapon has been integrated into cruiser and destroyer combat systems. Navy cruisers each have two 5-inch guns, Navy Arleigh Burke (DDG-51) class destroyers each have one 5-inch gun, and the Navy's three new Zumwalt class (DDG-1000) destroyers each have two 155mm guns. **Figure 10** shows launch packages for the then-named HVP configured for 5-inch guns, 155mm guns, and EMRG.

Figure 8. Photograph Showing HVP

Source: Navy photograph dated April 4, 2014, with a caption that reads in part: "Rear Adm. Matthew Klunder, chief of naval research, shows off a Hypervelocity Projectile (HVP) to CBS News reporter David Martin during an interview held at the Naval Research Laboratory's materials testing facility." Accessed August 12, 2015, at http://www.navy.mil/view_image.asp?id=174517.

[43] Sydney J. Freedberg Jr., "$86,000 + 5,600 MPH = Hyper Velocity Missile Defense," *Breaking Defense*, January 26, 2018; Jared Keller, "The U.S. Military Has a New 'Bullet' That Attacks At Mach Six (with 100 Mile Range)," *National Interest*, February 3, 2018.

In September 2012, when the concept was to use the then-named HVP as a common projectile for both EMRG and powder guns (which might still happen), the Navy described the projectile as

> a next generation, common, low drag, guided projectile capable of completing multiple missions for gun systems such as the Navy 5-Inch, 155-mm, and future railguns. Types of missions performed will depend on gun system and platform. The program goal is to address mission requirements in the areas of Naval Surface Fire Support, Cruise Missile Defense, Anti-Surface Warfare, and other future Naval mission areas. Mission performance will vary from gun system, launcher, or ship. HVP's low drag aerodynamic design enables high velocity, maneuverability, and decreased time-to-target. These attributes coupled with accurate guidance electronics provide low cost mission effectiveness against current threats and the ability to adapt to air and surface threats of the future.
>
> The high velocity compact design relieves the need for a rocket motor to extend gun range. Firing smaller more accurate rounds improves danger close/collateral damage requirements and provides potential for deeper magazines and improved shipboard safety. Responsive wide area coverage can be achieved using HVP from conventional gun systems and future railgun systems.
>
> The modular design will allow HVP to be configured for multiple gun systems and to address different missions. The hypervelocity projectile is being designed to provide lethality and performance enhancements to current and future gun systems. A hypervelocity projectile for multiple systems will allow for future technology growth while reducing development, production, and total ownership costs.
>
> Research Challenges & Opportunities [include]:
>
> -- High acceleration tolerant electronic components
>
> -- Lightweight, high strength structural composites
>
> -- Miniature, high density electronic components
>
> -- Safe high energy propellants compatible with shipboard operations
>
> -- Aerothermal protection systems for flight vehicles[44]

[44] Office of Naval Research, "Hypervelocity Projectile," September 2012, accessed October 21, 2016, at http://www.onr.navy.mil/~/media/Files/Fact-Sheets/35/Hypervelocity-Projectile-2012B.ashx.

Figure 9. HVP

Source: Slide 7 from Navy briefing entitled "Electromagnetic Railgun," NDIA Joint Armaments Forum, Exhibition & Technology Demonstration, May 14, 2014, LCDR Jason Fox, USN, Assistant PM [Program Manager], Railgun Ship Integration, Distribution A, Approved for Public Release, accessed August 13, 2015, at http://www.dtic.mil/ndia/2014armaments/WedFox.pdf.

When fired from 5-inch powder guns, GLGP reportedly achieves a speed of roughly Mach 3, which is roughly half the speed it achieves when fired from EMRG, but more than twice the speed of a conventional 5-inch shell fired from a 5-inch gun.[45] This is apparently fast enough for countering at least some ASCMs. The Navy states that "The HVP—combined with the MK 45 [5-inch gun][46]—will support various mission areas including naval surface fire support, and has the capacity to expand to a variety of anti-air threats, [and] anti-surface [missions], and could expand the Navy's engagement options against current and emerging threats."[47]

[45] Source: Sam LaGrone, "Updated: Navy Researching Firing Mach 3 Guided Round from Standard Deck Guns," *USNI News*, June 1, 2015 (updated June 2, 2015).

[46] The type of 5-inch gun on Navy cruisers and destroyers is called the Mark 45.

[47] Naval Surface Warfare Center Dahlgren Division Corporate Communications, "DEPSECDEF Loads HVP on Test Range, Observes Repetitive Rate Electromagnetic Railgun's Commissioning Series," *Navy News Service*, May 8, 2015, accessed August 12, 2015, at http://www.navy.mil/submit/display.asp?story_id=86987.

Figure 10. HVP Launch Packages

Launch packages for 5-inch gun, 155mm gun, and EMRG

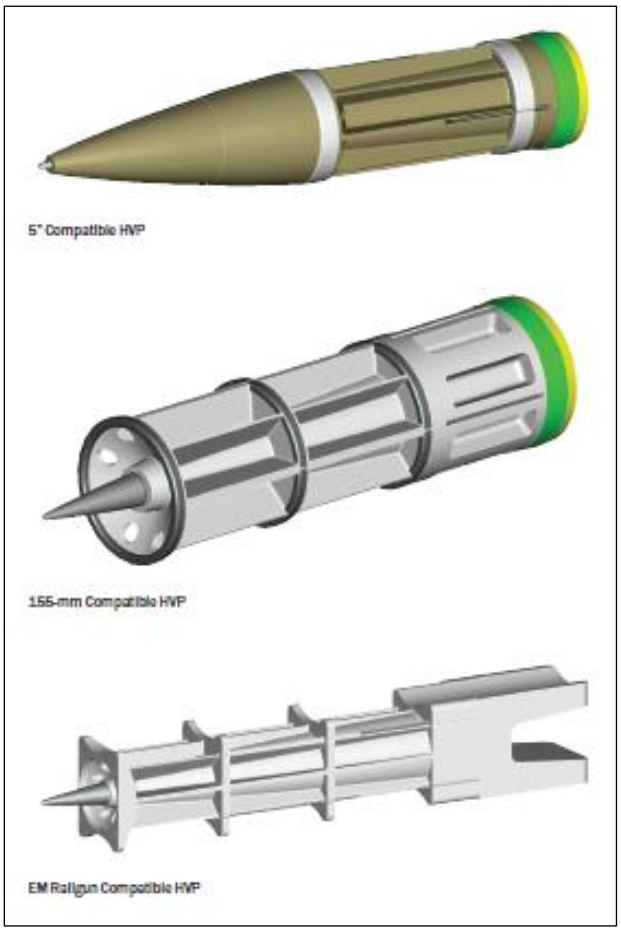

Source: BAE Systems, "Hypervelocity Projectile (HVP)," 2014, accessed August 14, 2015, at http://www.baesystems.com/download/BAES_178505/hyper-velocity-projectile--datasheet.

A December 21, 2016, opinion column states the following:

> Now the Navy is acquiring rail guns that use such energy to fire 15- to 25-pound, 18-inch projectiles at 5,000 miles per hour. They hit with the impact of a train slamming into a wall at 100 miles per hour. The high-speed, hence high-energy projectiles, which cost just $25,000, can radically improve fleet-protection capabilities: A barrage of them could counter an enemy's more expensive anti-ship missiles.
>
> The daunting challenge posed by defense against the proliferating threat of ballistic missiles is that it is prohibitively expensive to be prepared to intercept a swarm of incoming missiles. New technologies, however, can revolutionize defense against ballistic missiles because small, smart projectiles can be inexpensive. It takes 300 seconds to pick up such a launched missile's signature, the missile must be tracked and a vector calculated for defensive projectiles. A single 25-pound projectile can dispense more than 500 three-gram tungsten impactors and be fired at hypervelocity by electromagnetic energy. Their impact force—their mass times the square of their velocity—can destroy expensive missiles and multiple warheads.[48]

[48] George F. Will, "Can Mattis Make Peace Through Technology?" *Washington Post*, December 21, 2016.

Figure 11 is a slide showing the potential application of the then-named HVP to 5-inch power guns, 155mm powder guns, and EMRG.

Figure 11. HVP Application to Various Launchers

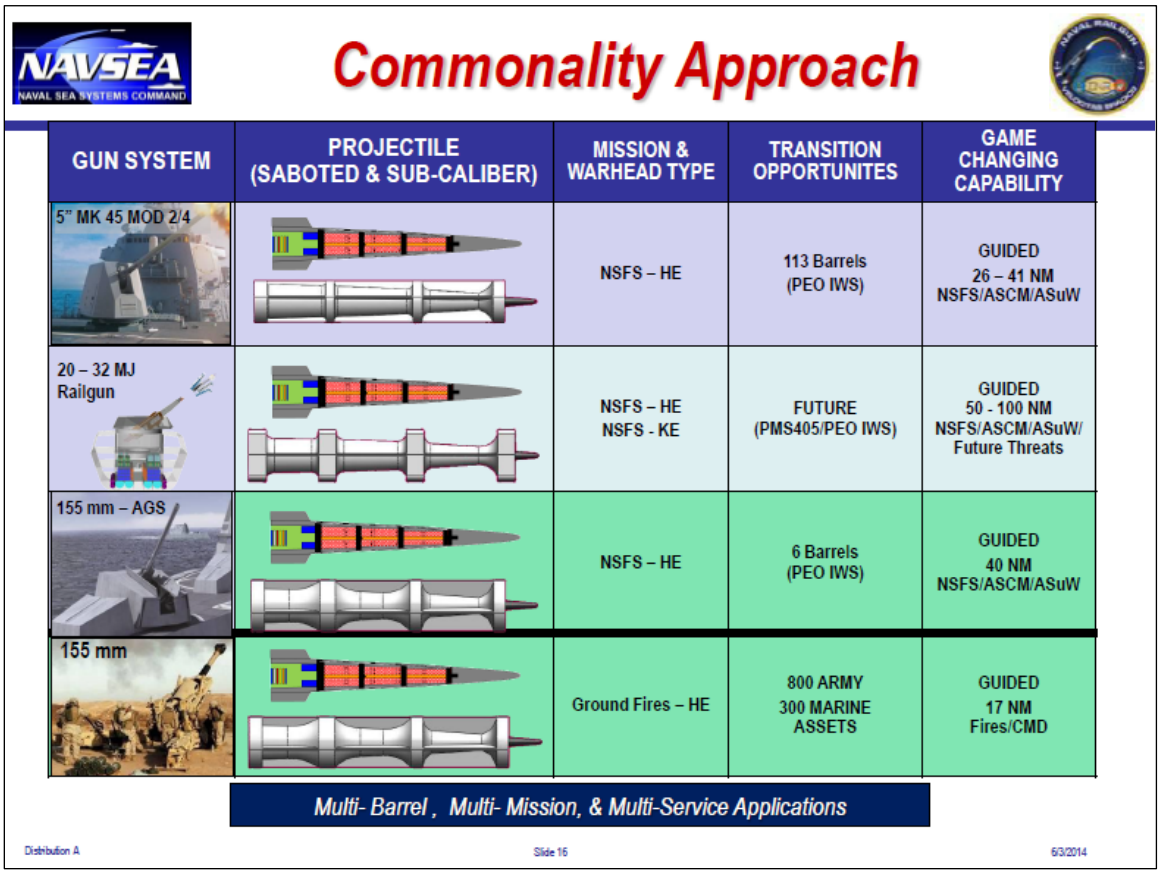

Source: Slide 16 from Navy briefing entitled "Electromagnetic Railgun," NDIA Joint Armaments Forum, Exhibition & Technology Demonstration, May 14, 2014, LCDR Jason Fox, USN, Assistant PM [Program Manager], Railgun Ship Integration, Distribution A, Approved for Public Release, accessed August 13, 2015, at http://www.dtic.mil/ndia/2014armaments/WedFox.pdf.

The first line of the slide in **Figure 11**, for example, discusses then-named HVP's use with 5-inch powder guns, stating that it uses a high-explosive (HE) warhead for the NSFS mission;[49] that a total of 113 5-inch gun barrels are available in the fleet (which could be a reference to 22 cruisers with two guns each, and 69 destroyers with one gun each); and that as a game-changing capability, it is guided and can be used at ranges of up to 26 nautical miles to 41 nautical miles for NSFS operations, for countering ASCMs, and for anti-surface warfare (ASuW) operations (i.e., attacking surface ships and craft).

Figure 12 is a not-to-scale illustration of how then-named HVPs fired from EMRGs and 5-inch guns could be used to counter various targets, including ASCMs and ASBMs.

[49] The "KE" in the next line down means that when fired from EMRG, the projectile can alternatively attack targets using its own kinetic energy (i.e., by impacting the target at hypersonic speed).

Figure 12. Navy Slide Depicting HVP Operations Against Various Target Types

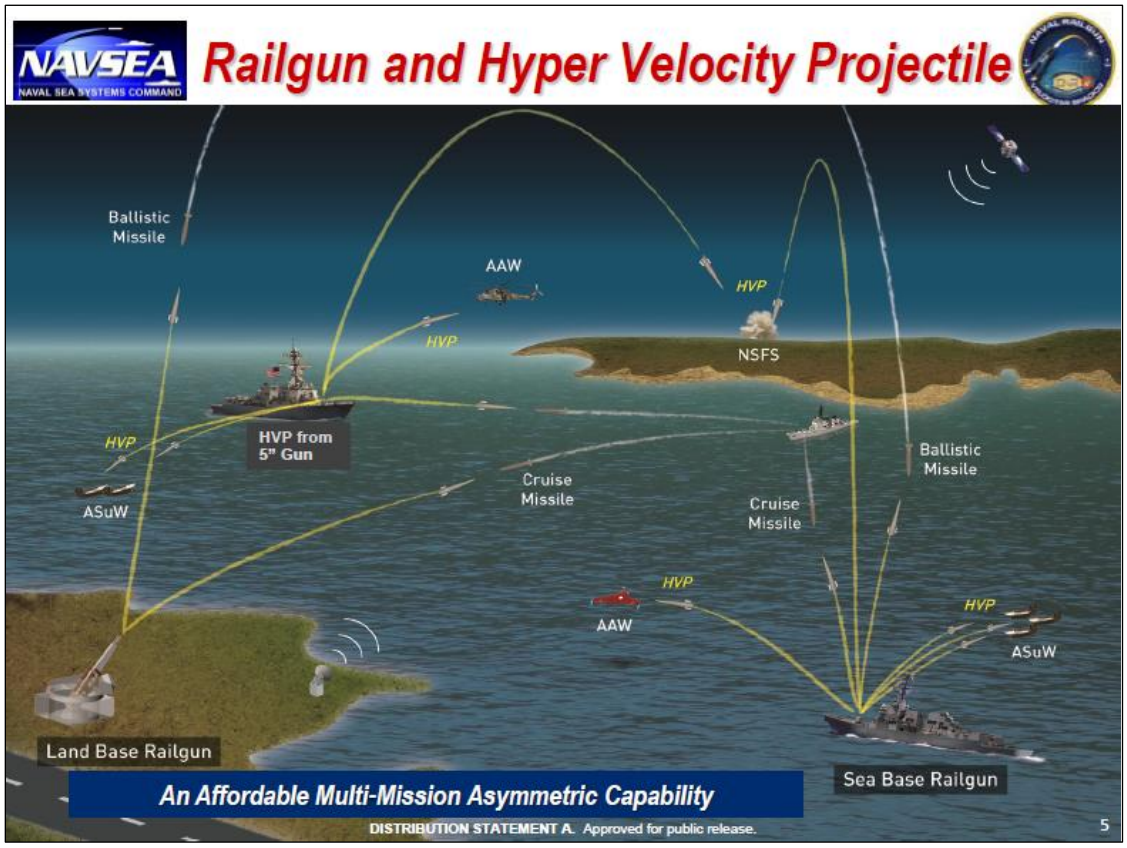

Source: Slide 5 from Navy briefing entitled "Electromagnetic Railgun," NDIA Joint Armaments Forum, Exhibition & Technology Demonstration, May 14, 2014, LCDR Jason Fox, USN, Assistant PM [Program Manager], Railgun Ship Integration, Distribution A, Approved for Public Release, accessed August 13, 2015, at http://www.dtic.mil/ndia/2014armaments/WedFox.pdf.

DOD Interest in GLGP

GLGP has emerged as a program of particular interest to DOD, which is exploring the potential for using the weapon across multiple U.S. military services. An April 11, 2016, press report states the following:

> The Pentagon wants to take a weapon originally designed for offense, flip its punch for defense and demonstrate by 2018 the potential for the Army and Navy to conduct missile defense of bases, ports and ships using traditional field guns to fire a new hypervelocity round guided by a mobile, ground variant of an Air Force fighter aircraft radar.
>
> The Strategic Capabilities Office [SCO] is working with the Army, Navy and Air Force to craft a Hypervelocity Gun Weapon System that aims, in part, to provide China and Russia an example of a secret collection of new U.S. military capabilities the Defense Department is bringing online in an effort to strengthen conventional deterrence.
>
> "It is a fantastic program," Will Roper, [then-]Strategic Capabilities Office director, said in a March 28 interview with reporters, who said the project aims "to completely lower the

> cost of doing missile defense" by defeating missile raids at a lower cost per round and, as a consequence, imposing higher costs on attackers.[50]

A May 2, 2016, press report states the following:

> "We thought rail guns were something we were really going to go after, but it turns out that powder guns firing the same hypervelocity projectiles gets you almost as much as you would get out of the electromagnetic rail gun, but it's something we can do much faster," [then-Deputy Secretary of Defense Robert] Work said. "We are going to say [to the next administration] 'Look, we believe this is the place where you want to put your money, but we're going to have enough money in there for both the electromagnetic rail gun and the powder gun.' So if the new administration says 'No really the electromagnetic rail gun is the way I want to go,' knock yourself out, we've set you up for success."[51]

A May 5, 2016, press report similarly states the following:

> Come January [2017], the Pentagon will almost assuredly have new leadership, complete with a new vision for how the Department of Defense should operate, organize and plan for the future.
>
> It's a reality facing down [then-]Defense Secretary Ash Carter and [then-]Deputy Secretary Bob Work as they try to complete a transformation at the Pentagon, one which both men have said is vital to making sure the US is able to maintain its technological edge against great powers like Russia and China in the future....
>
> "One of the things we have done in our program is build in a lot of different options that they [i.e., officials in the next administration] can pull levers on," Work explained.
>
> As an example, he pointed to the idea of an electromagnetic railgun. Initially, Work and his team thought that was an area that would be a major focus of development, but as they experimented they realized that a powder gun with a hypervelocity round could have almost the same impact—but at a fraction of the cost, because it did not require the development, testing and adaptation of a new gun.
>
> "We're going to say 'look, this is the place where [we think] you want to put your money,' but we're going to have enough money in both the electromagnetic railgun and the powder gun that if the new administration says 'I really want the electromagnetic railgun, this is the way I want to go,' knock yourself out," Work said. "We've set you up for success."[52]

A May 9, 2016, press report states the following:

> [Then-]Deputy Defense Secretary Bob Work said last week that current Pentagon leaders have made investments intended to position the next presidential administration to offset expected Russian and Chinese technological advancements, specifically highlighting lessons learned about a new hypervelocity gun.
>
> Work... said one of the key findings to emerge from the effort was the Hypervelocity Gun Weapon System, which he said could be poised to displace much of what the Defense Department had planned to invest in the Navy's electromagnetic rail gun.

---

[50] Jason Sherman, "SCO Aims To Flip The Script on Missile Defense With Hypervelocity Gun," *Inside the Navy*, April 11, 2016.

[51] Scott Maucione, "DoD Is Setting Up the Third Offset for the Next President," *Federal News Radio*, May 2, 2016.

[52] Aaron Mehta, "Pentagon No. 2: How to Keep Third Offset Going in the Next Administration," *Defense News*, May 5, 2016.

> "We thought rail guns were going to be something we were really going to go after," he said, adding that "it turns out that powder guns" are capable of firing the same projectiles, at the same velocity, for far less cost.[53]

A July 18, 2016, press report states the following:

> The Pentagon's office tasked with tweaking existing and developing military technology for new uses is pushing development of ammo meant for the electromagnetic railgun for use in existing naval guns and artillery pieces....
>
> About year and a half ago, researchers at the Pentagon's Strategic Capabilities Office and inside the service realized that there was more short-term promise for not only the Navy but the Army to use the Hyper Velocity Projectiles (HVP) rounds overseen by the Office of Naval Research (ONR) in both services existing powder guns, said [then-]SCO [Strategic Capabilities Office] head William Roper said last week.
>
> "To me they were just interesting test articles a few years ago, but thanks to that service input and us funding some high-risk demonstration we now think that we can do pretty revolutionary things with existing powder guns—think howitzers, Paladins, the Navy's five-inch guns. We've shifted emphasis to that," Roper said during a Wednesday talk at the Center for Strategic and International Studies (CSIS).
>
> "Not that we're not interested in railgun—we are—but if you look at the delta between fielding in quantity—we have [more than] a 1,000 powder guns, we have very few railguns."...
>
> The SCO-led research effort will work to create HVP sensor and a fire control regime that will find its way eventually to the railgun project, Roper said.
>
> "So when the railgun is ready to field it will be able to just be dropped in place as a better launcher as opposed to being a great technology that we have to build a new architecture for," he said.
>
> "We're going to take the bet and let's see if we can field this and let's completely flip the paradigm of missile defense."[54]

A September 19, 2016, press report states the following:

> After much deliberation, both public and private, the Pentagon, which has shifted emphasis away from the electromagnetic rail gun as a next-generation missile defense platform, sees a new hypervelocity powder gun technology as the key to demonstrating to potential adversaries like China and Russia that U.S. military units on land and sea can neutralize large missile salvos in future conflicts....
>
> "If you do that, you change every 155 [mm] howitzer in the U.S. Army in every NATO country into a cruise missile and tactical ballistic missile defender and, oh by the way, you extend their offensive range," [then-Deputy Secretary of Defense Robert] Work said.

The article states that Work "is pushing hard to lay the groundwork for the next presidential administration to conduct a military exercise called 'Raid Breaker' that would demonstrate the capabilities of the Hypervelocity Gun Weapon System program." It quotes him as stating that if DOD conducted such an exercise against 100 cruise missiles and ballistic missiles, "and were able to convince [potential adversaries] that we're able to knock down 95 to 98 of them, then that

[53] Tony Bertuca, "Work: New Hypervelocity Gun Could Displace Rail Gun in Next Administration," *Inside the Navy*, May 9, 2016.

[54] Sam LaGrone, "Pentagon: New Rounds For Old Guns Could Change Missile Defense for Navy, Army," *USNI News*, July 16, 2016 (updated July 19, 2016).

would have an enormous impact on the competition in the Pacific, on the competition in Europe and would [clearly] improve conventional deterrence." It further quotes him as stating that DOD's modeling shows that "if we can close the fire support with a controlled solution," the weapon would be able to shoot down most of a 100-missile raid.[55]

A May 19, 2017, press report states the following:

> An Army Howitzer is now firing a super high-speed, high-tech, electromagnetic Hyper Velocity Projectile, initially developed as a Navy weapon, an effort to fast-track increasing lethal and effective weapons to warzones and key strategic locations, Pentagon officials said.
>
> Overall, the Pentagon is accelerating developmental testing of its high-tech, long-range Electro-Magnetic Rail Gun by expanding the platforms from which it might fire and potentially postponing an upcoming at-sea demonstration of the weapon, Pentagon and Navy officials told Scout Warrior.
>
> While initially conceived of and developed for the Navy's emerging Rail Gun Weapon, the Pentagon and Army are now firing the Hyper Velocity Projectile from an Army Howitzer in order to potential harness near-term weapons ability, increase the scope, lethality and range ability to accelerate combat deployment of the lethal, high-speed round.[56]

A January 26, 2018, press report states the following:

> The Pentagon's Strategic Capabilities Office will test-fire a radical new missile defense system in less than a year....
>
> "That projectile is being designed to engage multiple threats," [Vincent Sabio, the HVP program manager at the Pentagon's Strategic Capabilities Office] said of the HVP. "There may be different modes that it operates in (in terms of) how does it maneuver, how does it close on the threat, and whether it engages a (explosive) warhead or whether it goes into a hit-to-hill mode. Those will all be based on the threat, and we can tell it as it's en route to the threat, 'here's what you're going after, this is the mode you're going to engage in.'"...
>
> So when will the Army and Navy actually get Hyper Velocity Projectiles? Both services are already working with SCO to plan a handover of the program, Sabio said. His role is just to prove the key technology works: specifically, to demonstrate that an HVP can maneuver close enough to "an inbound, maneuvering threat" that it could have destroyed it if fitted with the proper warhead. Sabio's not developing that warhead.
>
> "We are building out the full fire control loop including the sensors, the coms links, the projectile, the launchers (i.e.) the guns," he said. "The command and control…. I leave that to my independent transition partners, Navy and Army."
>
> And by when will the demonstration happen? "Well," said Sabio, "my program ends less than a year from now."[57]

Remaining Development Challenges

Although the Navy in recent years has made considerable progress in developing SSLs, EMRG, and GLGP, a number of significant development challenges remain. Overcoming these challenges

[55] Tony Bertuca, "DOD's New Hypervelocity Gun Technology Emerging As Key BMD Capability," *Inside the Navy*, September 19, 2016.

[56] Kris Osborn, "Pentagon to Accelerate Rail Gun Hypervelocity Projectile—Fires From Army Howitzer," *Scout Warrior*, May 19, 2017.

[57] Sydney J. Freedberg Jr., "$86,000 + 5,600 MPH = Hyper Velocity Missile Defense," *Breaking Defense*, January 26, 2018. See also Yasmin, "Secretive Pentagon Office Share Details About Hypervelocity Missile Defense Weapon (Updated)," *National Defense*, January 26, 2018.

will likely require years of additional development work, and ultimate success in overcoming them is not guaranteed.

Solid-State Lasers (SSLs)

Remaining development challenges for high-energy SSLs include, among other things, making the system rugged enough for extended shipboard use, making the beam director (the telescope-like part of the laser that sends the beam toward the target) suitable for use in a marine environment (where moisture and salt in the air can be harsh on equipment), and integrating the system into the ship's electrical power system and combat system. A January 23, 2015, blog post co-authored by the Office of Naval Research's program officer for the Navy's SSL program states the following:

> In the near term, many challenges remain to develop and operate high-energy laser systems in the maritime environment that are unique to the Navy and Marine Corps. Among these challenges is dealing with the heat generated as power levels increase. A second issue is packing sufficient power on the platform, which will require advanced battery, generator, power conditioning, and hybrid energy technologies. Current laser technologies are approximately 30 percent electrically efficient. Corrosion and contamination of optical windows by shipboard salt spray, dirt, and grime also are technical challenges. In addition, atmospheric turbulence resulting from shifting weather conditions, moisture, and dust is problematic. Turbulence can cause the air over long distances to act like a lens, resulting in the laser beam's diffusing and distorting, which degrades its performance.
>
> Much progress has been made in demonstrating high-energy laser weapon systems in the maritime environment, but there is still much to be done. Additional advances will be required to scale power levels to the hundreds of kilowatts that will make high[-]energy lasers systems robust, reliable, and affordable. Higher power levels are important for the ability to engage more challenging threats and improve the rate and range at which targets can be engaged.
>
> The programs managed by ONR are addressing these remaining issues while positioning this important warfighting capability toward an acquisition program and eventual deployment with the fleet and force.[58]

Skeptics sometimes note that proponents of high-energy military lasers over the years have made numerous predictions about when lasers might enter service with DOD, and that these predictions repeatedly have not come to pass. Viewing this record of unfulfilled predictions, skeptics have sometimes stated, half-jokingly, that "lasers are X years in the future—and always will be." Laser proponents acknowledge the record of past unfulfilled predictions, but argue that the situation has now changed because of rapid advancements in SSL technology and a shift from earlier ambitious goals (such as developing megawatt-power lasers for countering targets at tens or hundreds of miles) to more realistic goals (such as developing kilowatt-power lasers for countering targets at no more than a few miles). Laser proponents might argue that laser skeptics are vulnerable to what might be called cold plate syndrome (i.e., a cat that sits on a hot plate will not sit on a hot plate again—but it will not sit on a cold plate, either).

[58] Peter Morrison and Dennis Sorenson, "Developing a High-Energy Laser for the Navy," Future Force, January 23, 2015, accessed August 13, 2015, at http://futureforce.navylive.dodlive.mil/2015/01/high-energy-laser/. The authors are identified at the end of the post as follows: "Peter Morrison is the Office of Naval Research's program officer for the Navy's Solid-State Laser program. Dennis Sorenson is a contractor with the Office of Naval Research."

EMRG and GLGP

Remaining development challenges for EMRG involve items relating to the gun itself (including increasing barrel life to desired levels), the projectile, the weapon's electrical power system, and the weapon's integration with the ship. Fielding GLGP on cruisers and destroyers equipped with 5-inch and 155mm powder guns would additionally require GLGP to be integrated with the combat systems of those ships. The Navy stated the following in 2017:

> The Railgun INP is in the second phase of a two-phase development effort. INP Phase I (FY 2005-2011) successfully advanced foundational enabling technologies and explored, through analysis and war gaming, the railgun's multi-mission utility. Launcher energy was increased by a factor of five to the system objective muzzle energy of 32 mega joules (110 nautical miles range) and barrel life was increased from tens of shots to hundreds of shots. Two contractors delivered tactical-style advanced containment launchers proving the feasibility of composite wound launchers. Pulsed power size was cut in half while thermal management for firing rate (rep-rate) was added to the design. INP Phase II focuses on increasing rep-rate capability. Rep-rate adds new levels of complexity to all of the railgun sub-systems, including thermal management, autoloader, and energy storage. A new test facility capable of supporting rep-rate testing at full energy level is coming on line at the Terminal Range at the Naval Surface Warfare Center, Dahlgren, Virginia. A new demonstration launcher (DL1) has been delivered and installed at the Terminal Range to commission the new facility. Additional rep-rate composite launchers (RCLs) capable of rep-rate are in various stages of design and fabrication. The Office of Naval Research will develop a tactical prototype railgun launcher and pulsed-power architecture suitable for advanced testing both afloat and ashore.[59]

A May 19, 2017, press report states the following:

> Consider 35 pounds of metal moving at Mach 5.8. Ten shots per minute. 1,000 shots before the barrel wears out under the enormous pressures. That's the devastating firepower the Navy railgun program aims to deliver in the next two years, and they're well on their way.
>
> "We continue to make great technical progress," said Office of Naval Research program manager Tom Boucher. Boucher and an aide briefed me in the blazing hot courtyard of the Pentagon, which was hosting the annual DoD Lab Day — a kind of military-grade science fair.
>
> Three years ago, then-Chief of Naval Operations Jonathan Greenert declared that railguns — which fire projectiles with electromagnetic pulses rather than gunpowder — had come so close to battle-ready that he wanted to test-fire one at sea. Since then the Navy has changed course, deciding that permanent land-based test sites would provide more and better data for fewer dollars than an ad hoc installation aboard a repurposed fast transport (variously known as JHSV or EFP). So on November 17, along the Potomac River at the Naval Surface Warfare Center in Dahlgren, Va., a new 32-megajoule railgun built by BAE Systems opened fire for the first time.... A second railgun is being set up at the Army's White Sands Missile Range in the New Mexico desert, where there's enough wide-open space to fire the weapon at its maximum range of more than a hundred nautical miles.
>
> While White Sands tests the long-range performance of the projectile, Dahlgren will work on the weapon itself. Previous test weapons were like medieval bombards, firing just a few times per day. The Dahlgren team is now making multiple shots per hour as they work out the bugs, and by the end of the year they expect to reach the goal of 10 shots per minute.
>
> Once they've reached the 10-round a minute rate, Dahlgren will switch focus to barrel life. A decade ago, experimental railguns often wore out their barrel with a single shot. With

[59] U.S. Navy, *U.S. Navy Program Guide 2017*, p. 169.

> new materials better able to endure the intense stresses, the barrels on the current test weapons can last for hundreds of shots before requiring replacement — roughly how long a battleship's 16″ barrels lasted back in World War II. The goal is a barrel that lasts 1,000 rounds.[60]

Transitioning from Development to Procurement

Transitioning military technology efforts from the research and development phase to the procurement phase can sometimes be a challenge. Some military technology efforts fail to make the transition, falling into what observers sometimes refer to as the "valley of death" between research and development and procurement. A February 27, 2017, press report states that

> The Navy has established programs for high-energy lasers and the electromagnetic railgun at Naval Sea Systems Command acquisition directorates, paving the way for technologies that have long been stuck in research and development to potentially be installed on the service's ships one day.
>
> The program executive office for integrated warfare systems (PEO IWS) is developing acquisition plans for lasers and the electromagnetic railgun, as well as the railgun's associated weapon, the hypervelocity projectile, according to NAVSEA spokeswoman Christianne Witten.
>
> Last August, a "Directed Energy Program Office" was set up at the above-water sensors directorate within PEO IWS, Witten wrote in a Feb. 22 email. The new office was established to "accelerate the fielding of High Energy Laser (HEL) weapon systems to the fleet," according to the spokeswoman.
>
> Additionally, last June, the Navy's acquisition executive charged the surface-ship weapons program office at PEO IWS with developing an acquisition and fielding plan for the railgun and the hypervelocity projectile, Witten said.[61]

Issues for Congress

Potential Oversight Questions

Potential oversight questions for Congress regarding Navy programs for SNLWS, EMRG, and GLP include the following:

- Using currently available air-defense weapons, how well could Navy surface ships defend themselves in a combat scenario against an adversary such as China that has or could have large numbers of missiles and UAVs? How would this situation change if Navy surface ships in coming years were equipped with SNLWS, EMRG, GLGP, or some combination of these systems?
- How significant are the remaining development challenges for SNLWS, EMRG, and GLGP? Are current schedules for developing SNLWS, EMRG, and GLGP appropriate in relation to remaining development challenges and projected improvements in enemy missiles?

[60] Sydney J. Freedberg Jr., "Navy Railgun Ramps Up in Test Shots," *Breaking Defense*, May 19, 2017.

[61] Justin Doubleday, "Laser, Railgun Programs Transitioned to Navy Acquisition Offices," *Inside the Navy*, February 27, 2017.

- When does the Navy anticipate issuing roadmaps detailing its plans for procuring and installing production versions of SNLWS, EMRG, and GLGP on specific Navy ships by specific dates?
- Will the kinds of surface ships that the Navy plans to procure in coming years have sufficient space, weight, electrical power, and cooling capability to take full advantage of SNLWS and EMRG? What changes, if any, would need to be made in Navy plans for procuring large surface combatants (i.e., destroyers and cruisers) or other Navy ships to take full advantage of SNLWS and EMRGs?
- Given the Navy's interest in HPV, how committed is the Navy to completing the development of EMRG and eventually deploying EMRGs on Navy ships?[62]
- Are the funding line items for SNLWS, EMRG, and GLDP sufficiently visible for supporting congressional oversight sufficiently visible for supporting congressional oversight?

Legislative Activity for FY2019

Summary of Congressional Action on FY2019 Funding

Table 1 summarizes congressional action on the Navy's FY2019 research and development funding request for SNLWS, EMRG, and GLGP. Funding in the defense budget for research and development work on Navy SSLs in general (not just SNLWS) is spread across multiple research and development account line items (which are known as program elements, or PEs), including some not shown in **Table 1**. Some of the PEs shown in the table include funding for efforts other than SNLWS, EMRG, and GLGP, so congressional changes from requested amounts for those PEs might or might not relate to SNLWS, EMRG, or GLGP. Note that PE 0603801N and its Activity Title for directed energy and electric weapons appears twice in **Table 1**, for SNLWS and again for EMRG. Additional research and development funding for GLGP is included in a defense-wide research and development PE called Advanced Innovative Technologies (PE 0604250D8Z). This PE is not shown in **Table 1**. A February 2, 2018, press report states that DOD's Strategic Capabilities Office, which is funded through PE 0604250D8Z, requested $67 million FY2018 funding for development work on the then-named HVP.[63]

Table 1. Summary of Congressional Action on FY2019 Funding

In millions of dollars, rounded to nearest tenth

Program Element (PE) number, PE name, budget line number	Req.	Authorization			Appropriation		
		HASC	SASC	Conf.	HAC	SAC	Conf.
Surface Navy Laser Weapon System (SNLWS)							
0603925N, Directed Energy and Electric Weapon System (line 77),	223.3	171.3	223.3	142.4	138.6	131.9	
(Project 3402, Surface Navy Laser Weapon System (SNLWS), within PE 0603925N)	*(190.2)*						

[62] For an article discussing this question, see Jared Keller, "The Navy's Much-Hyped Electromagnetic Railgun May End Up Dead In The Water," *Task and Purpose*, December 4, 2017.

[63] Zachary Keck, "The Hyper Velocity Projectile: How the Navy Could Fire 5,600 MPH 'Bullets' at Missiles," *National Interest*, February 2, 2018.

		Authorization			Appropriation	
0603801N, Innovative Naval Prototypes (INP) Advanced Technology Development (line 30)	161.9	181.9	166.4	181.9	148.6	275.9
(Activity Title: Directed Energy/Electric Weapons, within PE 0603801N)	*(98.7)*					
Electromagnetic Railgun (EMRG)						
0602792N, Innovative Navy Prototypes (INP) Applied Research (line 15)	159.7	169.7	164.7	159.7	154.1	159.7
(Activity Title: Directed Energy/Electric Weapons, within PE 0602792N)	*(45.8)*					
0603801N, Innovative Naval Prototypes (INP) Advanced Technology Development (line 30)	161.9	181.9	166.4	181.9	148.6	275.9
(Activity Title: Directed Energy/Electric Weapons, within PE 0603801N)	*(98.7)*					
Gun Launched Guided Projectile (GLGP)						
0603795N, Land Attack Technology (line 74)	15.5	15.5	0	15.5	7.7	5.7
(Project 3401, Guided Projectile, within PE 0603795N)	*(15.5)*					

Source: Table prepared by CRS based on Navy FY2018 budget submission, committee and conference reports, and explanatory statements on FY2018 National Defense Authorization Act and FY2018 DOD Appropriations Act.

Notes: HASC is House Armed Services Committee; **SASC** is Senate Armed Services Committee; **HAC** is House Appropriations Committee; **SAC** is Senate Appropriations Committee; **Conf.** is conference agreement. The PEs shown in the table below capture much but not necessarily all of the funding for work on Navy SSLs, EMRG, and GLGP. The PEs shown in the table, moreover, include funding for efforts other than Navy SSLs, EMRG, and GLGP. Funding shown for line 74 does not include an additional $1.4 million requested for this line item in the Overseas Contingency Operations (OCO) account.

National Defense Authorization Act for Fiscal Year 2019/John S. McCain National Defense Authorization Act for Fiscal Year 2019 (H.R. 5515/S. 2987)

House

The House Armed Services Committee, in its report (H.Rept. 115-676 of May 15, 2018) on H.R. 5515, recommended the funding levels shown in the HASC column of **Table 1**. The recommended reduction of $52 million for line 77 is for "Program decrease." (Page 396) The recommended increase of $20 million for line 30 is for "Accelerate Navy railgun development and prototyping." (Page 394) The recommended increase of $10 million for line 15 is for "Accelerate Navy railgun development and prototyping." (Page 393)

Senate

The House Armed Services Committee, in its report (S.Rept. 115-262 of June 5, 2018) on S. 2987, recommended the funding levels shown in the SASC column of **Table 1**. The recommended increase of $4.5 million for line 30 is for "DE [directed energy] & EW/unmanned and autonomous systems." (Page 502) The recommended increase of $5.0 million for line 15 is for "Directed energy and electronic warfare/unmanned and autonomous systems." (Page 502) The recommended reduction of $15.529 million (the entire requested amount) for line 74 is for

"Program delay and no GLGP [gun-launched guided projectile] EMD [engineering and manufacturing development] FYDP funding." (Page 504)

Regarding the recommended increase for line 30, S.Rept. 115-262 states:

> **Innovative Naval prototypes—advanced technology development**
>
> The budget request included $18.5 billion in [the] Research, Development, Test, and Evaluation (RDT&E) [account], Navy, of which $161.8 million[64] was for PE 63801N [0603801N] advanced technology development in Innovative Naval Prototypes [line 30].
>
> The committee notes that this program element is tasked with developing leap ahead technologies in game-changing areas such as cyber, directed energy, electromagnetic warfare, and autonomous systems. The committee notes that undersea warfare capabilities are a key component of Navy modernization plans.
>
> Accordingly, the committee recommends an increase of $4.5 million, for a total of $166.3 million,[65] in [the] RDT&E, Navy account], PE 63801N [0603801N], for directed energy, electronic warfare, and unmanned and autonomous systems. (Page 77)

Regarding the recommended increase for line 15, S.Rept. 115-262 states:

> **Innovative Naval prototypes—applied research**
>
> The budget request included $18.5 billion in [the] Research, Development, Test, and Evaluation (RDT&E), Navy [account], of which $159.7 million was for PE 62792N [0602792N] applied research in Innovative Naval Prototypes [line 15].
>
> The committee notes that this program element is tasked with developing leap ahead technologies in game-changing areas such as cyber, directed energy, electromagnetic warfare, and autonomous systems.
>
> Accordingly, the committee recommends an increase of $5.0 million, for a total of $164.7 million, in [the] RDT&E, Navy [account], PE 62792N [0602792N], for directed energy, electronic warfare, and unmanned and autonomous systems. (Page 76)

Section 219 of S. 2987 as reported states:

> SEC. 219. Limitation on use of funds for Surface Navy Laser Weapon System.
>
> (a) Limitation.—None of the funds authorized to be appropriated or otherwise made available by this Act may be used to exceed a procurement quantity of one Surface Navy Laser Weapon System, also known as the High Energy Laser and Integrated Optical-dazzler with Surveillance (HELIOS), per fiscal year, unless the Secretary of the Navy submits to the congressional defense committees a report on such system with the elements set forth in subsection (b).
>
> (b) Elements.—The elements set forth in this subsection are, with respect to the system described in subsection (a), the following:
>
> (1) A document setting forth the requirements for the system, including desired performance characteristics.
>
> (2) An acquisition plan that includes the following:
>
> (A) A program schedule to accomplish design completion, technology maturation, risk reduction, and other activities, including dates of key design reviews (such as Preliminary Design Review and Critical Design Review) and program initiation decision (such as Milestone B) if applicable.

[64] In **Table 1**, this figure is rounded to $161.9 million.

[65] In **Table 1**, this figure is rounded to $166.4 million.

(B) A contracting strategy, including requests for proposals, the extent to which contracts will be competitively awarded, option years, option quantities, option prices, and ceiling prices.

(C) The fiscal years of procurement and delivery for each engineering development model, prototype, or similar unit planned to be acquired.

(D) A justification for the fiscal years of procurement and delivery for each engineering development model, prototype, or similar unit planned to be acquired.

(3) A test plan and schedule sufficient to achieve operational effectiveness and operational suitability determinations (such as Early Operational Capability and Initial Operational Capability) related to the requirements set forth in paragraph (1).

(4) Associated funding and item quantities, disaggregated by fiscal year and appropriation, requested in the Fiscal Year 2019 Future Years Defense Program.

(5) An estimate of the acquisition costs, including the total costs for procurement, research, development, test, and evaluation.

Regarding Section 219, S.Rept. 115-262 states:

Limitation on use of funds for Surface Navy Laser Weapon System (sec. 219)

The committee recommends a provision that would limit funds to exceed a procurement quantity of one Surface Navy Laser Weapon System (SNLWS), also known as the High Energy Laser and Integrated Optical-dazzler with Surveillance (HELIOS), per fiscal year, unless the Secretary of the Navy submits a report to the congressional defense committees.

The committee understands that Navy officials designated SNLWS/HELIOS as the first rapid prototyping, experimentation and demonstration (RPED) project. The committee further notes that, on January 26, 2018, the Navy awarded a $150.0 million contract for SNLWS Increment 1, HELIOS systems. Under this contract, the contractor will develop, manufacture, and deliver two test units in fiscal year 2020. The committee further understands this contract includes options for up to 14 additional production units, which, if exercised, would bring the cumulative contract value to $942.8 million.

If the cumulative contract value is reached, expenditures under this program may exceed the Acquisition Category (ACAT) I thresholds for research, development, test, and evaluation (RDT&E), including significant production. However, the committee has not yet received sufficient information on the requirements, acquisition plan, test plan, funding profile, and cost estimate to enable appropriate oversight.

The committee supports accelerated acquisition approaches, such as RPED. However, accelerated approaches, especially those that may expend significant resources and enter into production, such as SNLWS/HELIOS, must adhere to sound acquisition principles. Accordingly, this provision would direct the Secretary of the Navy to certify how SNLWS is incorporating those principles prior to exceeding the procurement rate of one SNLWS/HELIOS per year, including: a requirements document, acquisition plan, test plan, funding profile, and cost estimate. The committee encourages the Navy to tailor the certification materials to the extent provided for by existing flexibilities in acquisition law or regulation. (Pages 57-58)

Section 223 of S. 2987 as reported states:

SEC. 223. Joint directed energy test activities.

(a) Test activities.—The Under Secretary of Defense for Research and Engineering shall develop, establish, and coordinate directed energy testing activities adequate to ensure the achievement by the Department of Defense of goals of the Department for developing and deploying directed energy systems to match national security needs.

(b) Elements.—The activity established under subsection (a) shall include the following:

(1) The High Energy Laser System Test Facility of the Army Test and Evaluation Command.

(2) Such other test resources and activities as the Under Secretary may designate for purposes of this section.

(c) Designation.—The test activities established under subsection (a) shall be considered part of the Major Range and Test Facility Base (as defined in 196(i) of title 10, United States Code).

(d) Direction and control.—The conduct of testing activities under subsection (a) shall be subject to authority, direction, and control of the Under Secretary in the Under Secretary's capacity as the official with principal responsibility for the development and demonstration of directed energy weapons for the Department pursuant to section 219(a)(1) of the National Defense Authorization Act for Fiscal Year 2017 (10 U.S.C. 2431 note).

(e) Prioritization of effort.—In developing and coordinating testing activities pursuant to subsection (a), the Under Secretary shall prioritize efforts consistent with the following:

(1) Paragraphs (2) through (5) of section 219(a) of the National Defense Authorization Act for Fiscal Year 2017 (10 U.S.C. 2431 note).

(2) Enabling the standardized collection and evaluation of testing data to establish testing references and benchmarks.

(3) Concentrating sufficient personnel expertise of directed energy weapon systems in order to validate the effectiveness of new weapon systems against a variety of targets.

(4) Consolidating modern state-of-the-art testing infrastructure including telemetry, sensors, and optics to support advanced technology testing and evaluation.

(5) Formulating a joint lethality or vulnerability information repository that can be accessed by any of the military departments of Defense Agencies, similar to a Joint Munitions Effectiveness Manuals (JMEMs).

(6) Reducing duplication of directed energy weapon testing.

(7) Ensuring that an adequate workforce and adequate testing facilities are maintained to support missions of the Department of Defense.

Regarding Section 223, S.Rept. 115-262 states:

Joint directed energy test activities (sec. 223)

The committee recommends a provision that would direct the coordination and enhancement of directed energy test activities. The committee notes that next generation directed energy weapon systems are being developed by the Department of Defense (DOD) and industry but the Nation's infrastructure for testing those weapon systems is antiquated and in need of modernization.

The Department established the Nation's first High Energy Laser System Test Facility (HELSTF) in 1975, but the technology has seen significant advancements over the course of four decades. As directed energy weapon systems mature, the need to validate their performance becomes increasingly important. The workload and number of directed energy demonstrations and exercises have increased significantly since 1975 and the projected workload for fiscal years 2018–2022 for HELSTF is large and growing, and has expanded to include high-powered microwave testing. Given these trends, this provision would require the Under Secretary of Defense for Research and Engineering to focus on management and acceleration of directed energy testing activities. Elsewhere in this Act, the committee recommends additional funding to initiate the modernization of directed energy infrastructure and test activities.

> The committee applauds the Air Force for proposing plans for joint testing activities, which could potentially focus government expertise and reduce duplication of effort across the DOD, thus supporting more rapid and cost effective testing and fielding of directed energy weapon systems. The committee believes that doing so could also allow for broad, standardized collection and evaluation of data to establish test references and support acquisition and policy decisions in a more reliable fashion. (Pages 59-60)

Regarding a Navy research and development account funding line item that is not shown in **Table 1**, S.Rept. 115-262 states:

> **Directed energy applied research**
>
> The budget request included $18.5 billion in [the] Research, Development, Test, and Evaluation (RDT&E), Navy [account], of which $14.6 million was for PE 62114N [0602114N] power projection applied research [line 4]. The committee notes that the National Defense Strategy specifically highlights the importance of directed energy and the potential that it holds for future operational capabilities. Accordingly, the committee recommends an increase of $2.5 million, for a total of $17.1 million, in [the] RDT&E, Navy [account], PE 62114N [0602114N], power projection applied research. (Page 75)

S.Rept. 115-262 also states:

> **Hyper Velocity Projectile**
>
> The committee is aware that the Strategic Capabilities Office (SCO) is testing a Hyper Velocity Projectile (HVP), a next generation, common, low drag, guided projectile capable of completing multiple missions for Navy 5-inch guns, Army and Marine Corps 155-mm howitzers, and future electromagnetic (EM) railguns.
>
> The committee understands that the development and fielding of HVP is a priority to address mission requirements for conventional cannon artillery, naval surface fire support, cruise missile defense, anti-ship warfare, and anti-aircraft warfare. The HVP will also be critical to future EM railguns, which could achieve projectile speeds of Mach 6, double that of conventional naval cannons and artillery.
>
> The committee believes that the increased velocity, precision and extended range of the HVP will provide the Navy, Army, and Marine Corps with the capability to address a variety of current and future threats. Coupled with accurate guidance electronics, HVP could provide low cost mission effectiveness against current threats and the ability to adapt to future air and surface threats.
>
> Therefore, the committee directs the Director of the Strategic Capabilities Office, in consultation with the Secretary of the Navy, the Secretary of the Army, and the Commandant of the Marine Corps, to submit a report to the congressional defense committees by December 31, 2018, on the status of the HVP program. The report should include when testing will complete and a description of how HVP could be fielded on current and future naval guns and cannon artillery, including the Extended Range Cannon Artillery (ERCA) Program. (Page 115)

Conference

The conference report (H.Rept. 115-874) on H.R. 5515 recommends the funding levels shown in the authorization conference column of **Table 1**. The recommended reduction of $80.932 million for line 77 is for "Program decrease." (Page 1211) The recommended increase of $20.0 million for line 30 is for "Accelerate Navy railgun development and prototyping." (Page 1209)

Section 232 of H.R. 5515 states:

> SEC. 232. LIMITATION ON USE OF FUNDS FOR SURFACE NAVY LASER WEAPON SYSTEM.

(a) LIMITATION.—None of the funds authorized to be appropriated or otherwise made available by this Act may be used to exceed, in fiscal year 2019, a procurement quantity of one Surface Navy Laser Weapon System, also known as the High Energy Laser and Integrated Optical-dazzler with Surveillance (HELIOS), unless the Secretary of the Navy submits to the congressional defense committees a report on such system with the elements set forth in subsection (b).

(b) ELEMENTS.—The elements set forth in this subsection are, with respect to the system described in subsection (a), the following:

(1) A document setting forth the requirements for the system, including desired performance characteristics.

(2) An acquisition plan that includes the following:

(A) A program schedule to accomplish design completion, technology maturation, risk reduction, and other activities, including dates of key design reviews (such as Preliminary Design Review and Critical Design Review) and program initiation decision (such as Milestone B) if applicable.

(B) A contracting strategy, including requests for proposals, the extent to which contracts will be competitively awarded, option years, option quantities, option prices, and ceiling prices.

(C) The fiscal years of procurement and delivery for each engineering development model, prototype, or similar unit planned to be acquired.

(D) A justification for the fiscal years of procurement and delivery for each engineering development model, prototype, or similar unit planned to be acquired.

(3) A test plan and schedule sufficient to achieve operational effectiveness and operational suitability determinations (such as Early Operational Capability and Initial Operational Capability) related to the requirements set forth in paragraph (1).

(4) Associated funding and item quantities, disaggregated by fiscal year and appropriation, requested in the Fiscal Year 2019 Future Years Defense Program.

(5) An estimate of the acquisition costs, including the total costs for procurement, research, development, test, and evaluation.

Section 235 of H.R. 5515 states:

SEC. 235. JOINT DIRECTED ENERGY TEST ACTIVITIES.

(a) TEST ACTIVITIES.—The Under Secretary of Defense for Research and Engineering shall, in the Under Secretary's capacity as the official with principal responsibility for the development and demonstration of directed energy weapons for the Department of Defense pursuant to section 219(a)(1) of the National Defense Authorization Act for Fiscal Year 2017 (Public Law 114–328; 10 U.S.C. 2431 note), develop, establish, and coordinate directed energy testing activities adequate to ensure the achievement by the Department of Defense of goals of the Department for developing and deploying directed energy systems to match national security needs.

(b) ELEMENTS.—The activity established under subsection (a) shall include the following:

(1) The High Energy Laser System Test Facility of the Army Test and Evaluation Command.

(2) Such other test resources and activities as the Under Secretary may designate for purposes of this section.

(c) DESIGNATION.—The test activities established under subsection (a) shall be considered part of the Major Range and Test Facility Base (as defined in 196(i) of title 10, United States Code).

(d) PRIORITIZATION OF EFFORT.—In developing and coordinating testing activities pursuant to subsection (a), the Under Secretary shall prioritize efforts consistent with the following:

(1) Paragraphs (2) through (5) of section 219(a) of the National Defense Authorization Act for Fiscal Year 2017 (10 U.S.C. 2431 note).

(2) Enabling the standardized collection and evaluation of testing data to establish testing references and benchmarks.

(3) Concentrating sufficient personnel expertise of directed energy weapon systems in order to validate the effectiveness of new weapon systems against a variety of targets.

(4) Consolidating modern state-of-the-art testing infrastructure including telemetry, sensors, and optics to support advanced technology testing and evaluation.

(5) Formulating a joint lethality or vulnerability information repository that can be accessed by any of the military departments of Defense Agencies, similar to a Joint Munitions Effectiveness Manuals (JMEMs).

(6) Reducing duplication of directed energy weapon testing.

(7) Ensuring that an adequate workforce and adequate testing facilities are maintained to support missions of the Department of Defense.

FY2019 DOD Appropriations Act (H.R. 6157/S. 3159)

House

The House Appropriations Committee, in its report (H.Rept. 115-769 of June 20, 2018) on H.R. 6157, recommended the funding levels shown in the HAC column of **Table 1**. The recommended reduction of $84.702 million for line 77 is for "SNLWS development excess growth" ($80.932 million) and "SNL WS government and support engineering services excess growth" ($3.77 million). (Page 248) The recommended reduction of $13.236 million for line 30 is for "Cyber unjustified growth" ($3.727 million) and "Directed energy/electric weapons excess growth" ($9.509 million). (Page 247) The recommended reduction of $5.612 million for line 15 is for "Cyber excess growth." (Page 246) The recommended reduction of $7.784 million for line 74 is for "Guided projectile schedule delays." (Page 248)

Senate

The Senate Appropriations Committee, in its report (S.Rept. 115-290 of June 28, 2018) on S. 3159, recommended the funding levels shown in the SAC column of **Table 1**. The recommended net reduction of $91.43 million for line 77 includes a recommended reduction of $106.43 million for "Restoring acquisition accountability: Project 3402 additional prototypes" and a recommended increase of $15.0 million for "Program increase: Electromagnetic railgun." (Page 169) The recommended increase of $114 million for line 30 is for "Program increase: Electromagnetic railgun" ($15.0 million) and "Program increase: Rail gun with hypervelocity projectile" ($99.0 million). (Page 168) The recommended net reduction of $9.829 million for line 74 includes a recommended reduction of $14.829 million for "Restoring acquisition accountability: Project 3401 lack of program funding" and a recommended increase of $5 million for "Program increase: Guided projectile." (Pages 168-169)

S.Rept. 115-290 states:

> *Solid State Laser—Technology Maturation*.—The Committee notes and supports the Navy's increased investment in several directed energy programs, to include the Solid State—Technology Maturation [SSL–TM] program, which is intended to accelerate the evaluation of the military utility of laser weapons across a range of Navy mission applications by fielding initial capabilities on surface ships. The Committee notes that since its inception, the SSL–TM program scope has expanded and development costs have tripled. Further, cost overruns have occurred at multiple program levels, and significant concurrency between the development and fielding efforts are creating further risk to cost and schedule. Therefore, the Committee directs the Government Accountability Office [GAO] to provide to the congressional defense committees, not later than 90 days after enactment of this Act, a report reviewing the SSL–TM program. At a minimum, the report should review: (1) program requirements, including changes thereto; (2) technology readiness levels including maturity relative to requirements; (3) the current acquisition strategy and program baseline(s); (4) the SSL–TM test strategy and associated resourcing; (5) contract strategy, and (6) the program management structure. (Pages 172-173)

Appendix. Potential Advantages and Limitations of Shipboard Lasers

This appendix presents additional information on potential advantages and limitations of shipboard lasers.

Potential Advantages

In addition to a low marginal cost per shot and deep magazine, potential advantages of shipboard lasers include the following:

- **Fast engagement times.** Light from a laser beam can reach a target almost instantly (eliminating the need to calculate an intercept course, as there is with interceptor missiles) and, by remaining focused on a particular spot on the target, cause disabling damage to the target within seconds. After disabling one target, a laser can be redirected in several seconds to another target.
- **Ability to counter radically maneuvering missiles.** Lasers can follow and maintain their beam on radically maneuvering missiles that might stress the maneuvering capabilities of Navy SAMs.
- **Precision engagements.** Lasers are precision-engagement weapons—the light spot from a laser, which might be several inches in diameter, affects what it hits, while generally not affecting (at least not directly) separate nearby objects.
- **Graduated responses.** Lasers can perform functions other than destroying targets, including detecting and monitoring targets and producing nonlethal effects, including reversible jamming of electro-optic (EO) sensors. Lasers offer the potential for graduated responses that range from warning targets to reversibly jamming their systems, to causing limited but not disabling damage (as a further warning), and then finally causing disabling damage.

Potential Limitations

Potential limitations of shipboard lasers include the following:

- **Line of sight.** Since laser light tends to fly through the atmosphere on an essentially straight path, shipboard lasers would be limited to line-of-sight engagements, and consequently could not counter over-the-horizon targets or targets that are obscured by intervening objects. This limits in particular potential engagement ranges against small boats, which can be obscured by higher waves, or low-flying targets. Even so, lasers can rapidly reacquire boats obscured by periodic swells.
- **Atmospheric absorption, scattering, and turbulence.** Substances in the atmosphere—particularly water vapor, but also things such as sand, dust, salt particles, smoke, and other air pollution—absorb and scatter light from a shipboard laser, and atmospheric turbulence can defocus a laser beam. These effects can reduce the effective range of a laser. Absorption by water vapor is a particular consideration for shipboard lasers because marine environments feature substantial amounts of water vapor in the air. There are certain wavelengths of light (i.e., “sweet spots” in the electromagnetic spectrum) where atmospheric absorption by water vapor is markedly reduced. Lasers can be

designed to emit light at or near those sweet spots, so as to maximize their potential effectiveness. Absorption generally grows with distance to target, making it in general less of a potential problem for short-range operations than for longer-range operations. Adaptive optics, which make rapid, fine adjustments to a laser beam on a continuous basis in response to observed turbulence, can counteract the effects of atmospheric turbulence. Even so, lasers might not work well, or at all, in rain or fog, preventing lasers from being an all-weather solution.

- **Thermal blooming.** A laser that continues firing in the same exact direction for a certain amount of time can heat up the air it is passing through, which in turn can defocus the laser beam, reducing its ability to disable the intended target. This effect, called thermal blooming, can make lasers less effective for countering targets that are coming straight at the ship, on a constant bearing (i.e., "down-the-throat" shots). Other ship self-defense systems, such as interceptor missiles or a CIWS, might be more suitable for countering such targets. Most tests of laser systems have been against crossing targets rather than "down-the-throat" shots. In general, thermal blooming becomes more of a concern as the power of the laser beam increases.
- **Saturation attacks.** Since a laser can attack only one target at a time, requires several seconds to disable it, and several more seconds to be redirected to the next target, a laser can disable only so many targets within a given period of time. This places an upper limit on the ability of an individual laser to deal with saturation attacks—attacks by multiple weapons that approach the ship simultaneously or within a few seconds of one another. This limitation can be mitigated by installing more than one laser on the ship, similar to how the Navy installs multiple CIWS systems on certain ships.
- **Hardened targets and countermeasures.** Less-powerful lasers—that is, lasers with beam powers measured in kilowatts (kW) rather than megawatts (MW)—can have less effectiveness against targets that incorporate shielding, ablative material, or highly reflective surfaces, or that rotate rapidly (so that the laser spot does not remain continuously on a single location on the target's surface) or tumble. Small boats (or other units) could employ smoke or other obscurants to reduce their susceptibility to laser attack.[66] Measures such as these, however, can increase the cost and/or weight of a weapon, and obscurants could make it more difficult for small boat operators to see what is around them, reducing their ability to use their boats effectively.
- **Risk of collateral damage to aircraft, satellites, and human eyesight.** Since light from an upward-pointing laser that does not hit the target would continue flying upward in a straight line, it could pose a risk of causing unwanted collateral damage to aircraft and satellites. The light emitted by SSLs being developed by the Navy is of a frequency that can cause permanent damage to human eyesight, including blinding. Blinding can occur at ranges much greater than ranges for damaging targeted objects. Scattering of laser light off the target or off fog or particulates in the air can pose a risk to exposed eyes.[67]

[66] See, for example, "Kelsey D. Atherton, "China Plans To Defeat American Lasers With Smoke," *Popular Science*, May 3, 2016.

[67] The United States in 1995 ratified the 1980 Convention on Prohibitions or Restriction on the Use of Certain Conventional Weapons Which May be Deemed to be Excessively Injurious or to Have Indiscriminate Effects. An

For additional background information on potential Navy shipboard SSLs, see CRS Report R41526, *Navy Shipboard Lasers for Surface, Air, and Missile Defense: Background and Issues for Congress*, by Ronald O'Rourke.

Author Information

Ronald O'Rourke
Specialist in Naval Affairs

Disclaimer

This document was prepared by the Congressional Research Service (CRS). CRS serves as nonpartisan shared staff to congressional committees and Members of Congress. It operates solely at the behest of and under the direction of Congress. Information in a CRS Report should not be relied upon for purposes other than public understanding of information that has been provided by CRS to Members of Congress in connection with CRS's institutional role. CRS Reports, as a work of the United States Government, are not subject to copyright protection in the United States. Any CRS Report may be reproduced and distributed in its entirety without permission from CRS. However, as a CRS Report may include copyrighted images or material from a third party, you may need to obtain the permission of the copyright holder if you wish to copy or otherwise use copyrighted material.

international review of the convention began in 1994 and concluded in May 1996 with the adoption of, among other things, a new Protocol IV on blinding laser weapons. The protocol prohibits the employment of lasers that are specifically designed to cause permanent blindness to the naked eye or to the eye with corrective eyesight devices. The United States ratified Protocol IV on December 23, 2008, and it entered into force for the United States on July 21, 2009. DOD views the protocol as fully consistent with DOD policy. DOD believes the lasers discussed in this report are consistent with DOD policy of prohibiting the use of lasers specifically designed to cause permanent blindness to the naked eye or to the eye with corrective eyesight devices. For further discussion, see Appendix I ("Protocol on Blinding Lasers") in CRS Report R41526, *Navy Shipboard Lasers for Surface, Air, and Missile Defense: Background and Issues for Congress*, by Ronald O'Rourke.