Congressional Research Service
Informing the legislative debate since 1914

U.S. Rail Transportation of Crude Oil: Background and Issues for Congress

Updated December 4, 2014

Congressional Research Service
https://crsreports.congress.gov
R43390

CRS REPORT
Prepared for Members and
Committees of Congress

Summary

North America is experiencing a boom in crude oil supply, primarily due to growing production in the Canadian oil sands and the recent expansion of shale oil production from the Bakken fields in North Dakota and Montana as well as the Eagle Ford and Permian Basins in Texas. Taken together, these new supplies are fundamentally changing the U.S. oil supply-demand balance. The United States now meets 66% of its crude oil demand from production in North America, displacing imports from overseas and positioning the United States to have excess oil and refined products supplies in some regions.

The rapid expansion of North American oil production has led to significant challenges in transporting crudes efficiently and safely to domestic markets—principally refineries—using the nation's legacy pipeline infrastructure. In the face of continued uncertainty about the prospects for additional pipeline capacity, and as a quicker, more flexible alternative to new pipeline projects, North American crude oil producers are increasingly turning to rail as a means of transporting crude supplies to U.S. markets. Railroads are more willing to enter into shorter-term contracts with shippers than pipelines, offering more flexibility in a volatile oil market. According to rail industry officials, U.S. freight railroads delivered 435,560 carloads of crude oil in 2013 (roughly equivalent to 300 million barrels), compared to 9,500 carloads in 2008. In the first half of 2014, 258,541 carloads of crude oil were delivered. Crude imports by rail from Canada have increased more than 20-fold since 2011. The amount of oil transported by rail may also be influenced by a tight market for U.S.-built tankers. However, if recent oil price declines persist and the price falls below the level at which Bakken producers can cover their costs, some production could be shut in, potentially reducing the volume of oil carried by rail.

While oil by rail has demonstrated benefits with respect to the efficient movement of oil from producing regions to market hubs, it has also raised significant concerns about transportation safety and potential impacts to the environment. The most recent data available indicate that railroads consistently spill less crude oil per ton-mile transported than other modes of land transportation. Nonetheless, safety and environmental concerns have been underscored by a series of major accidents across North America involving crude oil transportation by rail—including a catastrophic fire that caused numerous fatalities and destroyed much of Lac Mégantic, Quebec, in 2013. Following that event, the U.S. Department of Transportation issued a safety alert warning that the type of crude oil being transported from the Bakken region may be more flammable than traditional heavy crude oil.

Legislation introduced in Congress following the Lac Mégantic disaster would require railroads to have at least two crew members aboard all trains. In addition, policy makers are proposing regulatory changes involving tank car design, prevention of derailments, and selection of preferred routes for transporting oil by rail. Congress may evaluate these changes in the reauthorization of the Rail Safety Improvement Act of 2008 (P.L. 110-432).

Contents

Introduction 1
Why Is Oil Moving by Rail? 2
The Economics of Oil by Rail 4
The Role of Barges and Ships in Domestic Crude Transportation 7
The Jones Act 9
The Role of Tank Trucks 10
Oil Spill Concerns 10
Special Concerns About Canadian Dilbit 13
Special Concerns About Bakken Crude 14
Federal Oversight of Oil Transport by Rail 14
Issues for Congress 16
Railroad Safety and Incident Response 16
Tank Car Safety Design 17
Preventing Derailments 19
Railroad Operations 20
Incident and Oil Spill Response 22
Rail vs. Pipeline Development 22
Rail vs. Waterborne Transport 24
Rail Transport and Crude Oil Exports 24

Figures

Figure 1. U.S. Refinery Capacity by PADD in 2012 3
Figure 2. U.S. Refinery Receipts of Crude Oil by Mode of Transportation 4
Figure 3. Crude Oil and Petroleum Product Spills during Domestic Transportation 10
Figure 4. Non-jacketed, Non-pressure Tank Car 17

Contacts

Author Information 25
Acknowledgments 25

Introduction

North America is experiencing a boom in crude oil supply, primarily due to the growth of heavy crude production in the Canadian oil sands[1] and the recent expansion of shale oil production in North Dakota, Montana, and Texas. North American production now supplies 66% of U.S. crude oil demand, displacing crude from Latin America, Africa, and the Middle East.

This shift has led to significant challenges in transportation, as refineries that once received crude oil principally from oceangoing tankers are now seeing increasing deliveries by domestic transport. Existing pipeline capacity is, in some cases, insufficient to carry growing crude oil from some production areas, or does not link to the refineries needing the oil. The domestic barge network does not serve some key production regions located far from navigable waterways. As a quicker, more flexible alternative to new pipeline projects, North American crude oil producers are increasingly turning to rail as a means of transporting crude supplies to U.S. markets. Increased exports of refined products—and, if Congress changes the law, of crude oil—could lead to even larger volumes of oil being transported by rail. According to rail industry officials, U.S. freight railroads delivered 435,560 carloads of crude oil in 2013, or roughly 300 million barrels, compared to 9,500 carloads in 2008.[2] In the first half of 2014, 258,541 carloads of crude oil were delivered.[3] Crude imports by rail from Canada have increased more than 20-fold since 2011.

The rapid increase in crude oil shipments by rail will likely increase the number of oil spills from rail transportation. However, the most recent data available indicate that railroads consistently spill less crude oil per ton-mile transported than other modes of land transportation. The amount of crude spilled per ton-mile of rail transport declined significantly between the early 1990s and the 2002-2007 period, the most recent years for which data are available.[4]

Nonetheless, the increase in rail shipments of crude has raised safety and environmental concerns. These concerns have been underscored by a series of major incidents involving crude oil transportation by rail, including a catastrophic fire and explosion in Lac Mégantic, Quebec, in July 2013 and a derailment in Casselton, ND, in December 2013 that led to a mass evacuation. Consequently, government agencies in the United States and Canada have issued new regulations and are considering others related to oil transport by rail, and some Members of Congress have called for tighter rules governing crude oil railcars as well as a broader reconsideration of the role of rail in the nation's oil transportation infrastructure.[5]

[1] The terms "oil sands" and "tar sands" are often used interchangeably to describe a particular type of nonconventional oil deposit. Opponents of the resource's development often use the term "tar sands," which arguably carries a negative connotation; proponents typically refer to the material as oil sands. The use of this term is not intended to reflect a point of view, but to adopt the term most commonly used by the primary executive-branch agencies involved in recent oil sands policy issues.

[2] Association of American Railroads, "Moving Crude Oil by Rail," September 2014, p. 4.

[3] *Oilgram Price Report*, "North American Crude By Rail Rising: BNSF," v. 92, no. 58, March 26, 2014, p. 1.

[4] Estimates by CRS based on data from Dagmar Etkin, *Analysis of U.S. Oil Spillage*, API Publication 356, August 2009, and Association of Oil Pipelines, *Report on Shifts in Petroleum Transportation: 1990-2009*, February 2012.

[5] See, for example, Office of Senator John Hoeven, "Hoeven to Meet Saturday with BNSF Railway President and CEO to Address Railroad Safety," press release, January 3, 2014.

Why Is Oil Moving by Rail?

In 2013, the United States produced 2.72 billion barrels of crude oil and imported another 2.82 billion barrels.[6] Canada has become the United States' leading foreign supplier, thanks to its increasing production from oil sands.[7] However, U.S. oil output has been increasing rapidly. In October 2013, U.S crude oil production exceeded imports for the first time since February 1995.[8]

The location of U.S. crude oil production has been changing rapidly. In particular, production in Alaska and from offshore sites has been declining, while production in Texas and North Dakota has been rising. The U.S. Geological Survey recently estimated that 2.7 billion barrels of light sweet crude oil remain in overlooked producing formations,[9] including the Eagle Ford shale, a prolific source of very light sweet crude oil in Texas, and the Bakken formation in North Dakota, a source of light sweet crude oil that rivals West Texas crude in quality.[10]

Almost all oil produced domestically, as well as some Canadian production, flows to one of the 115 U.S. refineries (**Figure 1**).[11] Nearly 45% of the country's refining capacity is located in the Gulf Coast, where 43 refineries process more than 9 million barrels of oil per day (bpd). However, the Midwest and the West Coast also have significant refining capacity.

[6] Energy Information Administration, *U.S. Crude Oil Supply & Disposition*, http://www.eia.gov/dnav/pet/pet_sum_crdsnd_k_a.htm. A barrel of oil is equal to 42 gallons.

[7] CRS Report R43128, *Oil Sands and the Oil Spill Liability Trust Fund: The Definition of "Oil" and Related Issues for Congress*, by Jonathan L. Ramseur.

[8] "US Crude Production Tops Imports For The First Time Since 1995," *Oil Daily*, November 14, 2013.

[9] M. Tennyson et al., *Assessment of Remaining Recoverable Oil in Selected Major Oil Fields of the Permian Basin, Texas and New Mexico*, 2012, USGS, http://pubs.usgs.gov/fs/2012/3051/.

[10] "Light" refers to oils with low specific gravity. "Sweet" refers to oils with low sulfur content. Light, sweet crudes are more valuable than heavier or sourer crude oils.

[11] For further information on the petroleum refining industry, refer to CRS Report R41478, *The U.S. Oil Refining Industry: Background in Changing Markets and Fuel Policies*, by Anthony Andrews et al.

Figure 1. U.S. Refinery Capacity by PADD in 2012

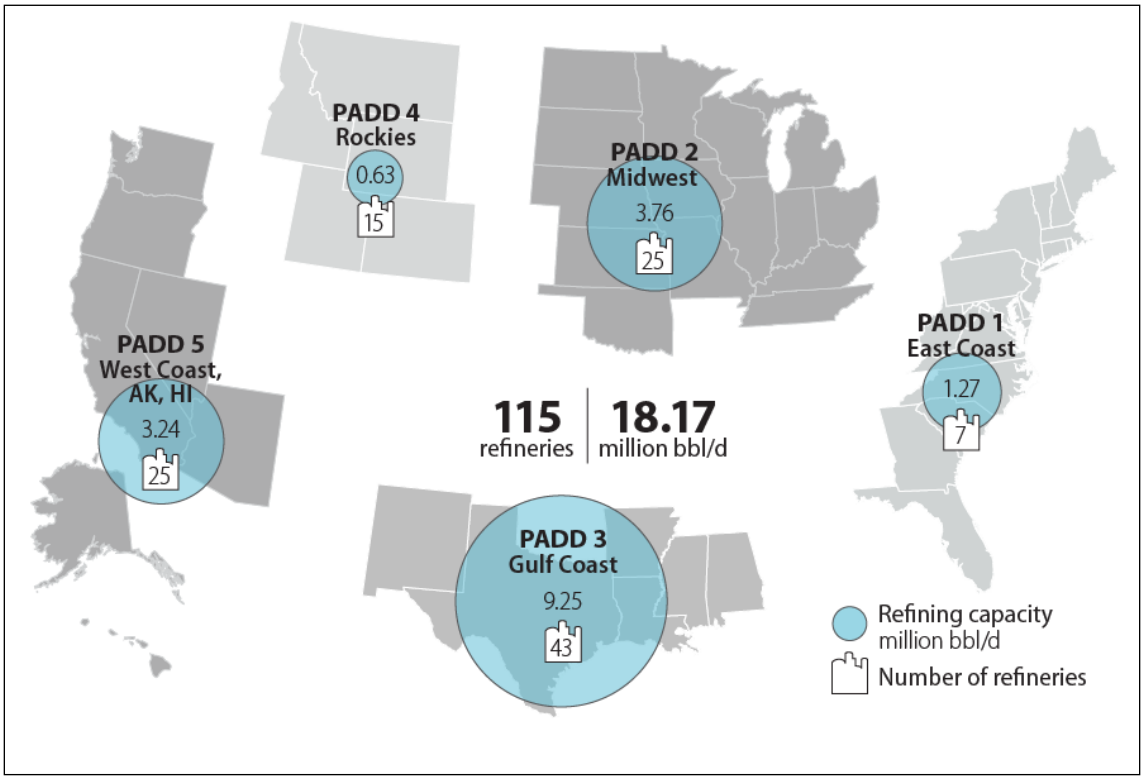

Sources: Congressional Research Service; Energy Information Administration.

Note: PADD = Petroleum Administration for Defense Districts, five districts established by executive order during World War II for gasoline rationing.

The last entirely new petroleum refinery in the United States opened in 1976. The number of refineries in operation has steadily declined since then as refining capacity has become concentrated in ever larger refineries. A quarter of U.S. capacity is concentrated in 11 refineries with capacities exceeding 300,000 bpd. The largest, Shell/Motiva's Baytown, TX, refinery, was recently expanded to 600,000 bpd. Operable U.S. refining capacity has actually increased from 16.5 million to nearly 18 million bpd over the last decade. Refineries representing approximately 75% of domestic capacity (13.3 million bpd) have the ability to process heavy crude oils, but many smaller refineries can process only light to intermediate crude oil.

Each refinery depends upon a certain grade or blend of crude oils to operate efficiently, depending upon its custom-designed processing equipment. A refinery designed to run light crude oil could not switch to heavy crude oil without adding a coking unit, for example. However, some refineries that process heavy sour crude could switch to lighter sweet crude by bypassing their coking units, if the economics of doing so are favorable. Until quite recently, the supply of light sweet crude oil was diminishing, but newly available light sweet crudes from North Dakota's Bakken formation are changing refining dynamics in some regions of the United States, especially as refineries seek supplies that cannot be delivered economically by tanker ships or pipelines.

Traditionally, pipelines and oceangoing tankers have delivered the vast majority of crude to U.S. refineries, accounting for approximately 90% of total receipts (in barrels) in 2013. Although other modes of transportation—rail, barge, and truck—have accounted for a relatively minor portion of crude oil shipments, volumes have been rising very rapidly. The volume of crude oil carried by

rail increased by 20-fold between 2008 and 2013, and the volume moving by barge, on inland waterways as well as along intracoastal routes, and by truck doubled during that time frame. **Figure 2** shows the change in transportation by mode between 2008 and 2013.

Figure 2. U.S. Refinery Receipts of Crude Oil by Mode of Transportation

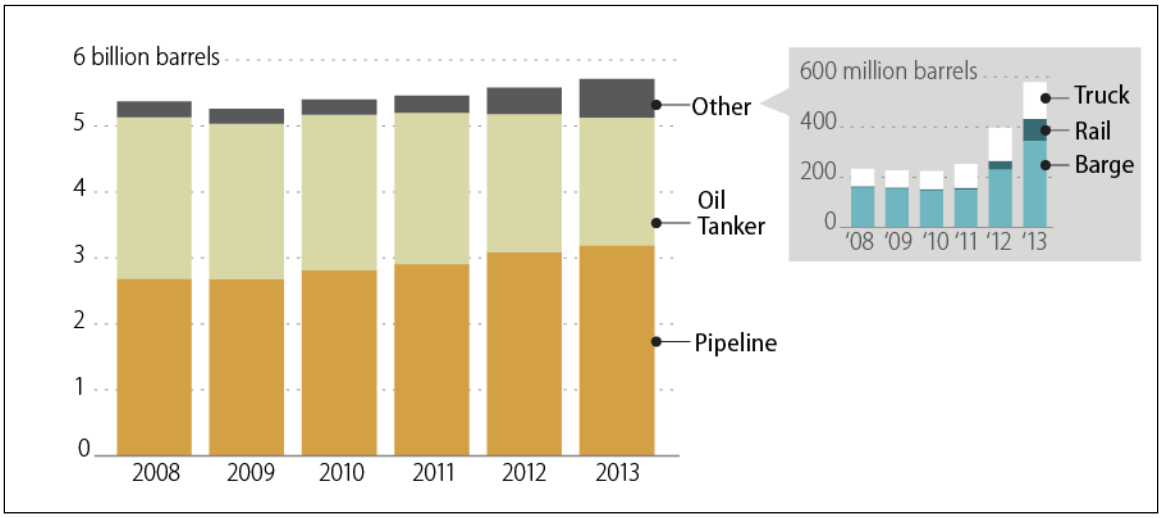

Source: Prepared by CRS; data from EIA, *Refinery Capacity Report*, Table 9, June 2014.

Notes: Some shipments may involve multiple modes, such as rail to barge. This figure indicates only the mode used for the last leg of such shipments.

Rail is a relatively high-cost method of transporting oil. Although crude oil transportation costs are typically not a major driver of refiner profitability, refiners are typically wary of incurring any costs that are higher than those faced by their competitors, as all refined petroleum products sold in a region tend to command the same price independent of the refinery that produced them.

The Economics of Oil by Rail

In the short run, rapid expansion of oil production in the Bakken—production volumes increased 10-fold between 2005 and 2014[12]—strained the capacity of existing pipelines and of refiners able to process the oil. Finding ready buyers was difficult, resulting in discounted prices compared to other crude oil traded in the U.S. market. With Bakken crude selling for approximately $4 to $28 per barrel less than West Texas Intermediate (WTI) crude, the U.S. reference price for crude grade, refiners found it profitable to utilize the North Dakota oil delivered by rail even though the rail transportation cost is perhaps $5 to $10 per barrel higher than pipeline costs.

Rail has also been critical to development of Canadian oil sands. Although the vast majority of crude oil imports from Canada are delivered via existing pipeline, imports by rail are estimated to have increased from 1.6 million barrels in 2011 to 40 million barrels in 2013. Construction of the proposed Keystone XL pipeline could move a significant proportion of these shipments off the rails, as pipeline transportation is likely to cost less per barrel.[13]

[12] Energy Information Administration crude oil production data, by state, available at http://www.eia.doe.gov.

[13] For more information about the Keystone XL pipeline, see CRS Report R43787, *Keystone XL Pipeline: Overview and Recent Developments*, by Paul W. Parfomak et al.

For certain refiners, the economics of using rail to transport Bakken oil supplies are even more attractive. For example, in 2012, several refineries in the Philadelphia area were scheduled for closure. The refineries were using imported crudes, largely sourced from West Africa, which sold at a premium to WTI.[14] Use of high-cost imported crude oil made their refined products, notably gasoline, uncompetitive against similar products produced by Gulf Coast refineries that used cheaper heavy crudes. By using supplies from the Bakken, these refineries have lowered their costs and have become more competitive. New owners are now investing in the refineries, including installation of high-speed rail unloaders that allow them to use Bakken crude oil. These innovations also reduce the cost of rail transportation per barrel.

The attractiveness of rail transportation of oil may not be permanent. Transporting Bakken crude by rail became cost-effective because of the price discounts created by pipeline bottlenecks, which prevented available supplies from reaching the consuming markets. If additional oil pipeline capacity is constructed to connect North Dakota with consuming markets, the pipeline bottleneck will be reduced.[15] As a greater share of Bakken oil reaches the market via pipeline, it is likely to result in reduced price discounts. With a reduced price discount, Bakken oil would be less competitive in refining when transported by rail. On the other hand, a smaller discount on Bakken crude oil prices would likely lead to greater drilling activity and production from the Bakken fields. Higher production, which expands supply, could support price discounts. Given the uncertainty about the future value of the oil, the longevity of the deposits, environmental issues and the difficulties in permitting and construction, it is uncertain how much pipeline construction will be undertaken. It may be that large volumes of crude oil could be transported by rail well into the future.

Lower oil prices prevalent in the second half of 2014 may also affect Bakken crude. If the price of oil falls to levels lower than the level at which Bakken producers can cover their costs, some production might be shut down, and/or the rate of growth of development and production would likely slow. It is uncertain as to how these changes might affect the price discount on Bakken crude oil.

Railroads are a viable alternative to pipeline transportation largely because they offer greater flexibility. The nation's railroad network is more geographically extensive than the oil pipeline network, and better able to ship crude oil from new areas of production to North American refineries. While there are about 61,000 miles of crude oil pipeline in the United States, there are nearly 140,000 miles of railroad.[16]

[14] Energy Information Administration price data, available at http://www.eia.doe.gov.

[15] Kirk Eggleston, "Two New Bakken Crude Oil Pipelines Online by 2016, and Enbridge's Sandpiper Pipeline Delayed," *Bakken Pipeline and Midstream News*, October 31, 2014, and October 2, 2014, available at http://bakkenshale.com.

[16] Pipeline data from PHMSA, railroad mileage from Association of American Railroads (includes shortline rail mileage, does not include parallel trackage).

The U.S. Railroad Industry in Brief

The U.S. rail network comprises seven large (Class I) railroads, which focus on moving products between North American regions. These railroads generally market to large volume, long-distance shippers. There are also roughly 500 "shortline" (Class II or III) railroads that sometimes serve as the first or final leg of a Class I rail shipment. Shortlines were often spun-off from Class I railroads because of insufficient business over the line. Class I railroads account for about 70% of system mileage, 90% of railroad employees, and about 95% of freight railroad revenue. Since crude oil movements involve non-traditional rail origins (drilling sites) and destinations (refineries), shortlines are often involved in these movements.

Railroad track is categorized into classes that determine the allowable speeds over the track.[17] Most track with the lowest speed limits is the property of shortlines. If track needs maintenance work, a railroad will issue a "slow order" on that section of track, reducing train speeds. Class I railroads have transitioned to using bigger and heavier cars, raising the maximum weight on many track sections from 263,000 lbs. to 286,000 lbs. Shortline railroads that interchange traffic with Class I railroads have had to improve their roadbeds to accommodate the heavier cars.

The railroad industry, since 1980, is mostly economically deregulated. The Surface Transportation Board can review the reasonableness of railroad rates and service in situations where the railroad is determined to have "market dominance," generally where a shipper is served by only one railroad and cannot ship economically by other means. As "common carriers," railroads are required to provide rail service upon reasonable request. Railroads do not require a special federal permit to transport crude oil. Federal railroad law preempts state and local authority, which is generally restricted to a state or local government's "police powers."

The geographic flexibility of the railroad network compared to the oil pipeline network can be especially beneficial for a domestic market in flux. Railroads can increase capacity relatively cheaply and quickly by upgrading tracks and roadbeds to accommodate higher train speeds, building passing sidings or parallel tracks, increasing the frequency of switchovers from one track to the other, and upgrading signal systems to reduce the headway needed between trains. Although railroads need approval from the federal Surface Transportation Board (STB) to build new lines, they do not require STB approval to make improvements to existing lines. And even without capacity improvements, railroads can offer routings not served by pipelines.

A significant fall-off in railroad coal movements has increased railroads' capacity to transport oil over some routes. In 2013, railroads carried about 395,000 more tank cars of crude than in 2005, but about 1.3 million fewer cars of coal. To put the increase in crude traffic in perspective, crude oil represented less than 1% of total rail carloads in 2012. In the first half of 2014, crude carloads increased to 1.6% of total rail car loadings. While, on a national scale, increased rail car loadings of crude oil represent a relatively small percentage of total traffic, significant increases in traffic in a specific area can cause bottlenecks that can reverberate across the entire rail network. The STB held hearings in April and September 2014 to hear complaints from non-oil shippers concerning poor rail service in the upper Midwest due to oil traffic and the severe winter weather.[18] The STB ordered BNSF and CP railroads to report how they intended to ensure delivery of fertilizer to farmers in spring 2014, and required all the railroads to provide weekly status reports on their performance. At the hearing, BNSF (the railroad most directly serving the Bakken region) noted that its car loadings in North Dakota had more than doubled from 2009 to 2013, and that in October 2013, crude oil and agricultural car loadings surged by more than it could manage. Past experience has shown that railroad bottlenecks are not quickly resolved.

This experience illustrates that pipelines can generally provide more reliable service than railroads. Among other differences, rail shipments are more affected by weather. In addition, railroads generally experience peak demand during the fall due to the grain harvest and retailers'

[17] See 49 C.F.R. §213.9.

[18] STB, Docket no. EP 724, April 10 and September 4, 2014.

holiday shipments. This may cause locomotives and track capacity to be in shorter supply at certain times of the year.

Railroad transport reportedly costs in the neighborhood of $10 to $15 per barrel compared with $5 per barrel for pipeline. In return, railroads offer oil producers certain advantages. Heated railroad tank cars improve the viscosity of oil sands crude so that less diluent needs to be added than if the product were being moved by pipeline. Generally, railroads are more willing to enter into shorter-term contracts with shippers than pipelines (1 to 2 years versus 10 to 15 years), offering more flexibility in a rapidly changing oil market. Recent oil price volatility seems to underscore this advantage. Moving oil by train from North Dakota to the Gulf Coast or Atlantic Coast requires about 5 to 7 days' transit, versus about 40 days for oil moving by pipeline, reducing producers' need for working capital to cover the cost of oil in transit.[19]

Crude oil often moves by unit train, a train that carries just one type of cargo in a single type of car and serving a single destination. Unit trains do not need to be switched or shunted in rail yards, saving time and reducing costs, and return to their point of origin as soon as they have been unloaded. A train consisting of 70 to 120 tank cars can carry in the neighborhood of 50,000 to 90,000 barrels of oil, depending on the type of crude.

One hindrance to the expansion of crude-by-rail has been the lack of tank cars and loading and unloading infrastructure. Much of this investment is being made by the oil industry or by rail equipment leasing companies, not railroads. As of April 2014, manufacturers had 50,000 crude oil tank cars on order, on top of an existing fleet of 43,000. (This is in addition to 30,000 tank cars that carry ethanol and 27,000 that carry other flammable liquids.) In 2013, over 28,000 tank cars of all types were built, up from over 17,000 in 2012.[20] Facilities for building tank cars are unique because the process involves baking the entire car in an oven. One manufacturer believes the tank car builders are capable of increasing production each year by 7,000 to 10,000 cars.

Rail terminal capacity is expected to increase fourfold from 2012 to 2015.[21] Matching the daily throughput volume of a pipeline requires several trains per day, with each train taking 13 to 24 hours to unload; oil rail terminals therefore require large areas for parallel loop tracks where multiple trains can await unloading.

The Role of Barges and Ships in Domestic Crude Transportation

Many refineries traditionally have received crude from overseas and thus are located near the coastline with access to dock facilities. Some are not equipped to receive crude by rail. Hence, some railroads are transferring oil to barges for the last leg of the trip to refineries. Locations where railroads transfer crude oil to barges include St. Louis and Hayti, MO; Osceola, AR; Hennepin, IL; Albany, NY; Yorktown, VA; and Anacortes and Vancouver, WA. In addition, crude produced at Eagle Ford, TX, which is located near ports, is being moved along the coast by either barge or ship.

One river barge can hold 10,000 to 30,000 barrels of oil. Two to three river barges are typically tied together in a single tow that carries 20,000 to 90,000 barrels, about the same load as a unit

[19] BB&T Capital Markets, "Examining The Crude By Barge Opportunity," June 10, 2013, p. 15.

[20] Tank car numbers from presentations by panel on tank car safety (panel 1), NTSB forum, *Rail Safety: Transportation of Crude Oil and Ethanol*, April 22-23, 2014.

[21] E. Russell Braziel, RBN Energy Inc. presentation at CSIS conference, *North American Oil and Gas Infrastructure, Shale Changes Everything*," November 14, 2013.

train. Coastal tank barges designed for open seas, known as articulated tug-barges, or ATBs,[22] can hold 50,000 to 185,000 barrels, although newer ATBs can carry as much as 340,000 barrels, comparable to the capacity of coastal tankers. ATBs are slower, less fuel-efficient, and more restricted by sea conditions, but nevertheless may have an economic advantage over tankers because Coast Guard crewing regulations allow them to sail with one-third to half the crew required on a tanker. Crude oil tankers used to move Alaska oil to West Coast refineries have capacities of 800,000 to over 1 million barrels.

An advantage of tankers over railroads is the greater amount of oil they can carry in a single voyage, which better matches the daily consumption rate of refineries. With the median capacity for U.S. refineries at about 160,000 barrels per day, a coastal tanker can carry a two-day supply of oil. In addition, while railroads must build and maintain tracks and pay property taxes on their rights-of-way, the ocean is free, and harbor channels are largely provided by the federal government. For these reasons, tankers can be much cheaper than railroads in moving oil, even though the railroad route may be much more direct. For instance, the distance between the Bakken region in North Dakota and refineries in the Northeast is approximately 1,800 miles, and the cost of railroad transport is $14 per barrel.[23] The distance from Texas ports near the Eagle Ford region to the same refineries is about 2,100 miles, and tanker rates are $5 to $6 per barrel.[24] Similarly, the overland distance from the Eagle Ford region to Los Angeles-area refineries is about 1,400 miles, and the estimated cost of railroad transport is $15 per barrel, while the water route through the Panama Canal is 5,200 miles and is estimated to cost $10 per barrel.[25]

Although seemingly a circuitous route compared to rail, it is not inconceivable that tankers could play a role in moving Bakken oil to East or West Coast refineries. Significant amounts of Bakken oil are moved to Gulf Coast terminals by pipeline, railroad, barge, or combinations of these modes for refining within that region. From a Gulf Coast port, tankers could transport the oil to either East or West Coast refineries. Via existing rail and pipeline connections to Great Lakes ports, tankers could also move Bakken oil from there to Northeast refineries. However, the economic viability of these routes, in particular, and routes involving domestic coastal transport in general, is heavily influenced by the Jones Act.[26]

[22] The bow of the tug fits into a notch in the stern of the barge and the tug is hinged to the barge on both sides of its hull, allowing fore and aft (pitch) movement, such as over sea swells.

[23] Platts, *Oilgram Price Report*, January through November 2014 issues. Railroad distance approximated using Rand McNally Road Atlas.

[24] Platts, *Oilgram News*, September 9, 2013; Bloomberg Businessweek, "U.S. Law Restricting Foreign Ships Leads to Higher Gas Prices," December 12, 2013. The sailing distance is 1,900 nautical miles (one nautical mile equals 1.151 statute miles); National Oceanic and Atmospheric Administration, *Distances Between United States Ports*, 2012.

[25] En*Vantage, Inc., "The Surge in U.S. Crude Oil Production," Presentation to PFAA 20th Annual Conference, October 24, 2013; Bloomberg, "Texas Vies with Saudi Arabian Oil in California Shipments," January 29, 2014. When expansion of the locks through the Panama Canal is completed in 2015, the capacity of tankers able to pass through will increase from 380,000 barrels to 600,000 barrels.

[26] Grain and feed producers in the upper Midwest contend that while they can move product economically by barge to New Orleans or by rail to a Great Lakes port, from there, because of the Jones Act, they have no economic access to dry bulk ships that could deliver the feed to eastern North Carolina hog and poultry farms. These farms import their feed from Canada and South America.

The Jones Act

The Jones Act may have a profound impact on where crude oil is sourced and how it is transported. The Jones Act requires that vessels transporting cargo between two U.S. points be built in the United States, as well as crewed and at least 75% owned by U.S. citizens.[27] The domestic build requirement for tanker ships, in particular, has been identified as contributing to higher costs in moving domestic crude oil along the coasts.[28] Domestically built tankers are about four times the price of foreign-built tankers,[29] and there is limited capacity in U.S. shipyards to build them. Much of the existing crude oil tanker fleet was built since 2000 to meet Oil Pollution Act of 1990 (P.L. 101-380) requirements that tankers calling at U.S. ports have double hulls. Two crude carriers were delivered in 2014 to replace two vessels in Alaska trade.

The Jones Act-eligible fleet of crude oil tankers consists of 10 ships, all employed in moving Alaska crude oil to the U.S. West Coast or to a refinery in Alaska.[30] Since annual Alaska oil production has fallen by about 46% over the last decade, the Jones Act crude oil fleet has been in decline. About 30 Jones Act-eligible tankers carry chemicals or refined petroleum products, such as gasoline or jet fuel, but these ships do not readily alternate between carrying dirty oil (crude oil, residual fuel oil, asphalt) and refined (clean) petroleum products because the tanks would have to be extensively washed after carrying dirty product, a time-consuming and costly process. Some product vessels have fundamentally different designs from crude carriers and would require a layup in a shipyard to be converted to move crude oil.[31]

Phillips 66 has chartered two Jones Act tankers to move crude oil from Eagle Ford, TX, to a refinery in Linden, NJ (in proximity to New York Harbor).[32] Phillips 66 has stated that if more Jones Act-eligible tankers were available, it would like to receive 100,000 barrels a day of Eagle Ford oil at this refinery (it would need several tankers to accomplish this, the exact number depending on the size of the tankers).[33] EIA data (which specify oil movement only between regions, not to individual refineries) indicate that roughly five times more Texas crude oil is being shipped in foreign-flag tankers to refineries in eastern Canada than is being shipped in Jones Act-qualified tankers to U.S. Northeast refineries.[34] The oil shipments from Texas to Canada cost approximately $2 per barrel, compared with $5 to $6 per barrel for shipments from Texas to U.S. Northeast refineries. The cost difference for a 300,000-barrel tanker amounts to around $1 million, meaning that a Texas oil producer receives $1 million less for its oil when shipping to U.S. Northeast refineries than when shipping to Canadian refineries.[35] The Bayway refinery also

[27] The law is codified at chapters 81, 121, and 551 of Title 46, *United States Code*.

[28] See for instance, "Oil and the Ghost of 1920," *Wall Street Journal*, September 13, 2012; Senate Committee on Energy and Natural Resources, Testimony of Faisel Khan, Managing Director, Integrated Oil and Gas Research, Citigroup. Hearing to Explore the Effects of Ongoing Changes in Domestic Oil Production, Refining and Distribution on U.S. Gasoline and Fuel Prices, July 16, 2013.

[29] U.S. Maritime Administration, Title XI Ship Financing Guarantees, Pending and Approved Loan Applications; American Petroleum Tankers S-1 SEC Filing; RS Platou Economic Research, annual and monthly reports; press releases from Teekay Tankers, Scorpio Tankers, and Euronav.

[30] U.S. Maritime Administration, U.S. Flag Privately Owned Merchant Fleet, Oceangoing Self-propelled Vessels.

[31] For further information on the Jones Act as it relates to domestic oil transport, see CRS Report R43653, *Shipping U.S. Crude Oil by Water: Vessel Flag Requirements and Safety Issues*, by John Frittelli.

[32] "Phillips 66 Charters Tankers To Bring Shale Oil To Bayway," *Argus Media*, December 13, 2012.

[33] Phillips 66 presentation at Bank of America Merrill Lynch Refining Conference, March 6, 2014.

[34] EIA, Petroleum and Other Liquids, Exports of Crude Oil and Receipts by Tanker and Barge.

[35] This situation is somewhat similar to the Pacific Northwest lumber industry in the 1960s and 1970s, which asserted it could not compete with western Canadian lumber because the Canadians could ship at lower international freight rates

receives 50,000 barrels of Bakken oil per day by rail, and is finishing construction of a rail unloading terminal with capacity of 75,000 barrels per day. The refinery has a capacity of 238,000 barrels per day. It may also source offshore oil from eastern Canada (with shipping rates fluctuating around $1.20 per barrel), as EIA data indicate that this was a top source of foreign oil for Northeast refineries in 2013.[36]

The Role of Tank Trucks

Tank trucks operating on U.S. roadways have been an important link in moving crude oil from domestic drilling sites to pipelines and rail terminals. A typical tank truck can hold 200 to 250 barrels of crude oil. Trucks readily serve the need for gathering product, as the hydraulic fracturing method of drilling employed in tight oil production involves multiple drilling sites in an area and the location of active wells is constantly in flux. A large volume of crude oil is being transported by truck between production areas and refineries in Texas because of the close proximity of the two.

Oil Spill Concerns

Each mode of oil transportation—pipelines, vessels, rail, and tanker trucks—involves some risk of oil spills. Over the period 1996-2007, railroads consistently spilled less crude oil per ton-mile than trucks or pipelines. Barges and domestic tanker ships have much lower spillage rates than trains (**Figure 3**). However, the data in **Figure 3** precede the recent dramatic increase in oil transportation by rail.

Figure 3. Crude Oil and Petroleum Product Spills during Domestic Transportation

Oil Spill Volume (Barrels) per Billion-Ton-Miles

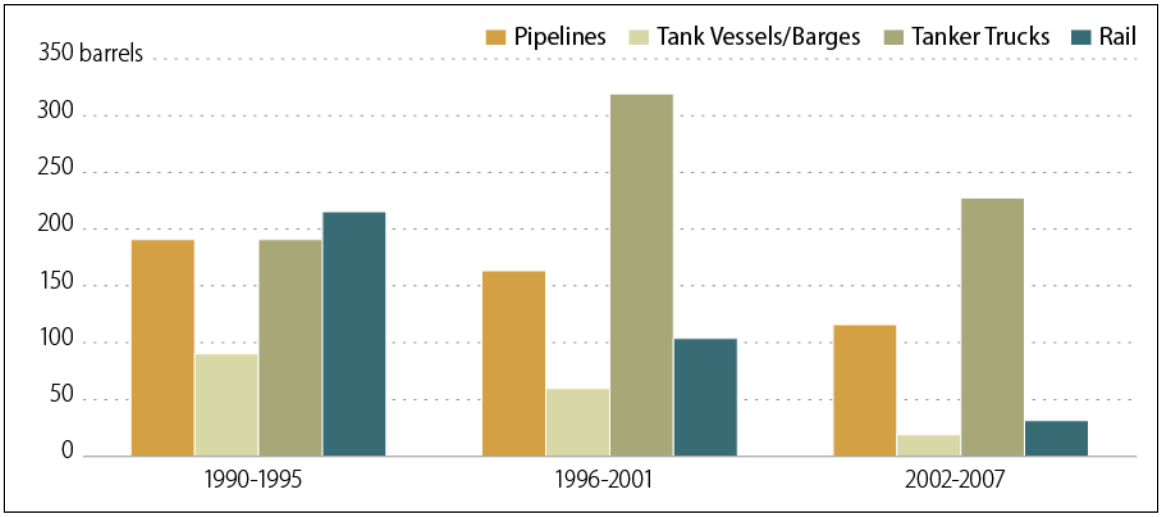

Sources: Prepared by CRS; oil spill volume data from Dagmar Etkin, *Analysis of U.S. Oil Spillage*, API Publication 356, August 2009; ton-mile data from Association of Oil Pipelines, *Report on Shifts in Petroleum Transportation: 1990-2009*, February 2012.

to the U.S. East Coast. Washington and Oregon still load significant amounts of wood products on ships, but they all sail to foreign destinations.

[36] Shipping rates from Platts, *Oilgram Price Report*, January through November 2014 issues.

Notes: Pipelines include onshore and offshore pipelines. The time periods were chosen based on the available annual data for both spill volume and ton-miles. The values for each time period are averages of annual data for each six-year period.

Given the comparatively small capacity of a rail tank car, around 700 barrels, the total amount spilled from even a major derailment is likely to be small compared to the 260,000 barrels discharged in the 1989 grounding of the *Exxon Valdez* in Prince William Sound, AK, or the approximately 40,000 barrels discharged in the largest U.S. pipeline oil spill CRS can document, which occurred in 1991 near Grand Rapids, MN.[37] Nonetheless, spill volume is arguably a relatively unimportant factor in terms of impacts and cleanup costs. Location matters more: a major spill away from shore will likely cost considerably less to abate than a minor spill in a populated location or sensitive ecosystem. Depending on timing and location, even a small spill can cause significant harm to individual organisms and entire populations.[38]

Although spillage per ton-mile of oil transported by rail declined over time, a recent series of major accidents (see the text box) has heightened concern about the risks involved in shipping crude by rail.

[37] Sources consulted include NOAA, Oil Spill Case Histories, 1967-1991, Summaries of Significant U.S. and International Spills, 1992; U.S. Coast Guard, Notable Spills in U.S. Waters, Calendar Years 1989-2008, 2009; Dagmar Etkin, Analysis of U.S. Oil Spillage, API Publication 356, August 2009; NOAA, Incident News, at http://incidentnews.gov; EPA, Enforcement and Compliance History Online (ECHO), at http://www.epa-echo.gov/echo/index.html.

[38] National Research Council, *Oil in the Sea III: Inputs, Fates, and Effects* (Washington, DC: National Academies of Science, February 2003).

Oil by Rail Derailments in 2013 and 2014

Lac Mégantic, Quebec—On July 5, 2013, a train with 72 loaded tank cars of crude oil from North Dakota moving from Montreal, Quebec, to St. John, New Brunswick, stopped at Nantes, Quebec, at 11:00 pm. The operator and sole railroad employee aboard the train secured it and departed, leaving the train on shortline track with a descending grade of about 1.2%. At about 1:00 AM, it appears the train began rolling down the descending grade toward the town of Lac-Mégantic, about 30 miles from the U.S. border. Near the center of town, 63 tank cars derailed, resulting in multiple explosions and subsequent fires. There were 47 fatalities and extensive damage to the town. 2,000 people were evacuated. The initial determination was that the braking force applied to the train was insufficient to hold it on the 1.2% grade and that the crude oil released was more volatile than expected.

Gainford, Alberta—On October 19, 2013, nine tank cars of propane and four tank cars of crude oil from Canada derailed as a Canadian National train was entering a siding at 22 miles per hour. About 100 residents were evacuated. Three of the propane cars burned, but the tank cars carrying oil were pushed away and did not burn. No one was injured or killed. The cause of the derailment is under investigation.

Aliceville, Alabama—On November 8, 2013, a train hauling 90 cars of crude oil from North Dakota to a refinery near Mobile, AL, derailed on a section of track through a wetland near Aliceville, AL. Thirty tank cars derailed and some dozen of these burned. No one was injured or killed. The derailment occurred on a shortline railroad's track that had been inspected a few days earlier. The train was travelling under the speed limit for this track. The cause of the derailment is under investigation.

Casselton, North Dakota—On December 30, 2013, an eastbound BNSF Railway train hauling 106 tank cars of crude oil struck a westbound train carrying grain that shortly before had derailed onto the eastbound track. Some 34 cars from both trains derailed, including 20 cars carrying crude, which exploded and burned for over 24 hours. About 1,400 residents of Casselton were evacuated but no injuries were reported. The cause of the derailments and subsequent fire is under investigation.

Plaster Rock, New Brunswick—On January 7, 2014, 17 cars of a mixed train hauling crude oil, propane, and other goods derailed likely due to a sudden wheel or axle failure. Five tank cars carrying crude oil caught fire and exploded. The train reportedly was delivering crude from Manitoba and Alberta to the Irving Oil refinery in Saint John, New Brunswick. About 45 homes were evacuated but no injuries were reported.

Philadelphia, Pennsylvania—On January 20, 2014, 7 cars of a 101-car CSX train, including 6 carrying crude oil, derailed on a bridge over the Schuylkill River. No injuries and no leakage were reported, but press photographs showed two cars, one a tanker, leaning over the river.

Vandergrift, Pennsylvania—On February 13, 2014, 21 tank cars of a 120-car train derailed outside Pittsburgh. Nineteen of the derailed cars were carrying crude oil from western Canada, and four of them released product. There was no fire or injuries.

Lynchburg, Virginia—On April 30, 2014, 15 cars in a crude oil train derailed in the downtown area of this city. Three cars caught fire, and some cars derailed into a river along the tracks. The immediate area surrounding the derailment was evacuated. No injuries were reported.

In March and April 2013, there were two derailments of Canadian Pacific trains, one in western Minnesota and the other in Ontario, Canada; less than a tank car of oil leaked in each derailment and neither incident caused a fire.

The increasing deployment of unit trains changes the risks involved in shipping oil by rail in two ways. Unit trains of crude oil concentrate a large amount of potentially environmentally harmful and flammable material, increasing the probability that, should an accident occur, large fires and explosions could result. This risk is similar to that of unit trains carrying ethanol, and maybe greater than that of mixed freight trains in which various hazardous materials, such as explosives and toxic-by-inhalation materials, are sequenced among other cars according to federal regulations.[39] On the other hand, while unit trains concentrate a voluminous quantity of potentially dangerous material, they may offer safety benefits from avoiding the decoupling and re-coupling of cars in rail yards, which involve high-impact forces and introduce opportunity for human error.

[39] These requirements are codified at 49 C.F.R. Section 174.85.

Special Concerns About Canadian Dilbit

Oil companies generate substantial quantities of crude oil and related substances from the natural bitumen in oil sands, particularly deposits in Alberta, Canada. In 2012, the United States imported 438 million barrels of oil sands-derived crude oils, 125% more than in 2005.[40] Because bitumen is highly viscous, it is transported mostly in the form of diluted bitumen, or dilbit, containing naptha or other materials that make it flow more easily.

Some commenters have argued that due to its physical characteristics, dilbit presents greater risks of oil spills than conventional crude, with potentially greater impacts to the environment.[41] Other stakeholders and organizations have questioned these conclusions.[42] A study released by the National Research Council in 2013, conducted at the direction of Congress,[43] found that the characteristics of dilbit do not increase the likelihood of spills.[44] The extent to which these findings are applicable to rail transport of crude is open to debate, as rail tanker cars may have different operating parameters (e.g., temperature) and physical standards (e.g., wall thickness), or may transport different forms of oil sands-derived crude oil, decreasing the relevance of the NRC findings.

However, observations in the aftermath of a 2010 pipeline spill are consistent with the assertion that dilbit may pose different hazards, and possibly different risks, than other forms of crude oil. On July 26, 2010, a pipeline owned by Enbridge Inc. released approximately 850,000 gallons of dilbit into Talmadge Creek, a waterway that flows into the Kalamazoo River in Michigan.[45] Three years after the spill, response activities continued,[46] because, according to EPA, the oil sands crude "will not appreciably biodegrade."[47] The dilbit sank to the river bottom, where it mixed with sediment, and EPA has ordered Enbridge to dredge the river to remove the oiled sediment.[48] As a result of this order, Enbridge estimated in September 2013 its response costs would be approximately $1.2 billion,[49] which is substantially higher than the average cost of cleaning up a similar amount of conventional oil.[50]

---

[40] Data from Canada's National Energy Board. See also CRS Report R43128, *Oil Sands and the Oil Spill Liability Trust Fund: The Definition of "Oil" and Related Issues for Congress*, by Jonathan L. Ramseur.

[41] The primary vehicle for these arguments was a 2011 report from several environmental groups. See Anthony Swift et al., *Tar Sands Pipelines Safety Risks*, Joint Report by Natural Resources Defense Council, National Wildlife Federation, Pipeline Safety Trust, and Sierra Club, February 2011.

[42] See, e.g., Crude Quality Inc., *Report regarding the U.S. Department of State Supplementary Draft Environmental Impact Statement*, May 2011; and Energy Resources Conservation Board, Press Release, "ERCB Addresses Statements in Natural Resources Defense Council Pipeline Safety Report," February 2011.

[43] P.L. 112-90, §16.

[44] National Research Council, *Effects of Diluted Bitumen on Crude Oil Transmission Pipelines*, 2013.

[45] National Transportation Safety Board, *Accident Report: Enbridge Incorporated Hazardous Liquid Pipeline Rupture and Release- Marshall, Michigan, July 25, 2010*, July 2012, at http://www.ntsb.gov/.

[46] For more up-to-date information, see EPA's Enbridge oil spill website at http://www.epa.gov/enbridgespill/index.html.

[47] Letter from Cynthia Giles, Environmental Protection Agency, to U.S. Department of State, April 22, 2013.

[48] EPA Removal Order, March 14, 2013, at http://www.epa.gov/enbridgespill/ar/enbridge-AR-1720.pdf.

[49] See Enbridge Inc., Management's Discussion and Analysis, February 2014, at http://enbridge.com/InvestorRelations/FinancialInformation/InvestorDocumentsandFilings.aspx.

[50] Based on cost estimates prepared in 2004. See Dagmar Etkin, *Modeling Oil Spill Response and Damages Costs*, Proceedings of the 5th Biennial Freshwater Spills Symposium, 2004, at http://www.environmental-research.com.

Special Concerns About Bakken Crude

The properties of Bakken shale oil are highly variable, even within the same oil field. In general, however, Bakken crude oil is much more volatile than other types of crude.[51] Its higher volatility may have important safety implications.[52]

In January 2014, the Pipeline and Hazardous Materials Safety Administration (PHMSA) within the U.S. Department of Transportation (DOT) issued a safety alert warning that recent derailments and resulting fires indicate that crude oil being transported from the Bakken region may be more flammable than traditional heavy crude oil.[53] PHMSA, whose rules are enforced by the Federal Railroad Administration with respect to railroads, reinforced the requirement to properly test, characterize, classify, and where appropriate sufficiently degasify hazardous materials prior to and during transportation. Under its initiative "Operation Classification," PHMSA is to continue to collect samples and measure the characteristics of Bakken crude as well as oil from other locations. In November 2014, the North Dakota Department of Mineral Resources proposed oil conditioning and processing standards before the oil is shipped to improve transportation safety.[54]

Federal Oversight of Oil Transport by Rail

The Federal Railroad Administration (FRA) has jurisdiction over railroad safety. It has about 500 federal inspectors throughout the country and also utilizes about 180 state railroad safety inspectors.[55] State inspectors predominantly enforce federal requirements because federal rail safety law preempts state law, and federal law is pervasive. The FRA uses past incident data to determine where its inspection activity should be targeted, although the FRA Administrator stated that in light of the growth of crude-by-rail transportation, the agency also must look for "pockets of risk."[56] FRA regulations cover the safety of track, grade crossings, rail equipment, operating practices, and movement of hazardous materials (hazmat). The Pipeline and Hazardous Materials Safety Administration within DOT (PHMSA) issues requirements for the safe transport of hazmat by all modes of transportation, which the FRA enforces with respect to railroads.[57]

Rail incidents are investigated by the National Transportation Safety Board (NTSB), an independent federal agency. The NTSB makes recommendations toward preventing future incidents based on its findings.[58] Unlike the FRA, the NTSB is not required to weigh the costs

[51] K.J. Bryden, E.T. Habib, Jr., and O.A. Topete, "Processing shale oils in FCC: Challenges and opportunities," September 1, 2013, http://www.hydrocarbonprocessing.com/Article/3250397/Processing-shale-oils-in-FCC-Challenges-and-opportunities.html.

[52] For further information on the properties of Bakken crude oil, see CRS Report R43682, *Small Refineries and Oil Field Processors: Opportunities and Challenges*, coordinated by Anthony Andrews; and CRS Report R43401, *Crude Oil Properties Relevant to Rail Transport Safety: In Brief*, by Anthony Andrews.

[53] Pipeline and Hazardous Materials Safety Administration, Safety Alert—January 2, 2014, Preliminary Guidance from OPERATION CLASSIFICATION. This advisory is a follow-up to the PHMSA and Federal Railroad Administration (FRA) joint safety advisory published November 20, 2013 [78 F.R. 69745].

[54] See https://www.dmr.nd.gov/oilgas/OilConditioningOrder25417a.pdf.

[55] http://www.dot.gov/fastlane/state-inspectors-help-fra-improve-rail-safety.

[56] FRA Administrator Szabo, Opening Remarks to RSAC Meeting, October. 31, 2013; http://www.fra.dot.gov/eLib/Details/L04852.

[57] FRA and PHMSA are agencies within DOT, which has the emergency authority to restrict or prohibit transportation that poses a hazard of death, personal injury, or significant harm to the environment. See 49 U.S.C. §20104.

[58] The NTSB held a forum on the safety of crude oil and ethanol transport by rail April 22 and 23, 2014; http://www.ntsb.gov/news/events/2014/railsafetyforum/.

against the benefits when considering additional safety measures and it has no regulatory authority. Many of the NTSB's recommendations concerning oil transport by rail are identical to those it previously issued for transporting ethanol by rail. While the FRA has largely agreed with NTSB's recommendations, its rulemaking process involves consultation with industry advisory committees, and it must determine which of the many rail safety measures under evaluation deserve priority. Implementing a change in FRA regulations can take years.

U.S. safety requirements apply to any train operating in the United States, regardless of its origin or destination. Canadian safety regulations are very similar but do not exactly mirror U.S. requirements. Cross-border shipments must meet the requirements of both countries. Safety standards established by the rail industry, which often exceed government requirements, apply to both U.S. and Canadian railroads.

When a rail incident results in the release of oil, state, territorial, or local officials are typically the first government representatives to arrive at the scene and initiate immediate safety measures to protect the public. The National Oil and Hazardous Substances Pollution Contingency Plan, often referred to as the National Contingency Plan (NCP), indicates that state, territorial, or local officials may be responsible for conducting evacuations of affected populations. These first responders also may notify the National Response Center to elevate an incident for federal involvement, at which point the coordinating framework of the NCP would be applied.

Unlike most federal emergency response plans, which are administrative mechanisms, the NCP is codified in federal regulation and is binding and enforceable.[59] The NCP regulations apply to applicable spills from vessels, pipelines, onshore facilities, and offshore facilities. The definition of "onshore facility" includes, but is not limited to, "motor vehicles and rolling stock."[60]

If an oil discharge affects navigable waterways, shorelines, or "natural resources belonging to, appertaining to, or under the exclusive management authority of the United States,"[61] Section 311 of the Clean Water Act, as amended by the Oil Pollution Act of 1990, Section 311(c), provides explicit federal authority to respond.[62] The term "discharge" is defined broadly and is not linked to specific sources of oil. The President has the authority to perform cleanup immediately using federal resources, monitor the response efforts of the spiller, or direct the spiller's cleanup activities.[63] Several executive orders have delegated the President's response authority to the Environmental Protection Agency (EPA) within the "inland zone" and to the U.S. Coast Guard within the coastal zone, unless the two agencies agree otherwise.[64] The lead federal agency serves as the On-Scene Coordinator to direct the federal resources used in a federal response.

---

[59] 40 C.F.R. Part 112.

[60] 40 C.F.R. §300.5. This definition is also found in the Clean Water Act and OPA.

[61] The Oil Pollution Act of 1990 expanded and clarified the President's authorities under Section 311 of the Clean Water Act (33 U.S.C. §2701 et. seq.). For a more in-depth discussion of the Oil Pollution Act, see CRS Report RL33705, *Oil Spills in U.S. Coastal Waters: Background and Governance*, by Jonathan L. Ramseur.

[62] 33 U.S.C. §1321. In addition, the Comprehensive Environmental Response, Compensation, and Liability Act (CERCLA) of 1980 expanded the authorities of the President to respond to releases of hazardous substances into the environment more broadly than CWA Section 311. See CRS Report R41039, *Comprehensive Environmental Response, Compensation, and Liability Act: A Summary of Superfund Cleanup Authorities and Related Provisions of the Act*, by David M. Bearden. For further details, see CRS Report R43251, *Oil and Chemical Spills: Federal Emergency Response Framework*, by David M. Bearden and Jonathan L. Ramseur.

[63] 33 U.S.C. §1321(c).

[64] Executive Order 12777, "Implementation of Section 311 of the Federal Water Pollution Control Act of October 18, 1972, as amended, and the Oil Pollution Act of 1990," 56 *Federal Register* 54757, October 22, 1991.

Regulations require that railroads have either a so-called "basic" response plan or a more "comprehensive" response plan, depending on the volume capacity of the rail car transporting the oil.[65] Comprehensive plans are subject to FRA approval, and must ensure by contract or other means that personnel and equipment are able to handle a worst-case discharge.[66] However, the regulatory threshold for the comprehensive response plan is a tank car holding more than 1,000 barrels, so does not apply to the DOT-111 tank cars used today, which hold around 700 barrels of oil apiece. For these smaller tank cars, railroads must prepare only "basic" response plans, which are not subject to FRA approval.

This threshold was established in 1996,[67] before the advent of oil unit trains, each of which may transport, in aggregate, approximately 70,000 barrels (almost 3 million gallons) of oil. The NTSB has recommended that the threshold for comprehensive plans be lowered to take into account the use of unit trains.[68] On August 1, 2014, U.S. DOT issued an advance notice of proposed rulemaking lowering the threshold.[69]

Issues for Congress

While oil by rail has demonstrated benefits with respect to the efficient movement of oil from producing regions to market hubs, the dramatic increase in oil by rail shipments has generated interest in several related issues. These include railroad safety, environmental concerns, and trade-offs over rail versus pipeline development.

Railroad Safety and Incident Response

Prior to the Lac Mégantic derailment, the FRA had increased its inspection activity with regard to trains carrying crude oil. After the derailment, the FRA and PHMSA (along with Transport Canada) initiated a comprehensive review of safety requirements.[70] Three areas of active discussion involve tank car design, prevention of derailments, and railroad operations. Railroads are an integrated system of fixed infrastructure, rolling equipment, and workers. Railroad safety experts note that improving safety performance requires recognition of the parameters and interactive effects among these components, and thus approaching railroad safety as an optimization problem is appropriate.[71] For instance, each additional safety feature on tank cars may increase their weight. This reduces the amount of product carried in each car due to track and bridge weight limits, potentially requiring additional tank cars to carry the same amount of product, and thus increasing the expected number of accidents.

[65] 49 C.F.R. Part 130.

[66] See 49 C.F.R. §130.31(a) with 49 C.F.R. §130.31(b).

[67] 61 *Federal Register* 30541 (June 17, 1996).

[68] NTSB, Safety Recommendation R-14-4 through -6, directed to PHMSA, January 21, 2014.

[69] 79 *Federal Register* 45079 (August 1, 2014).

[70] See FRA's Emergency Order No. 28 (78 *Federal Register* 48218), the agencies' Joint Safety Advisory published August 7, 2013 (78 *Federal Register* 48224), referral of safety issues to FRA's Railroad Safety Advisory Committee (78 *Federal Register* 48931), and a NPRM related to rail hazmat (78 *Federal Register* 54849).

[71] Xiang Liu, M. Rapik Saat, Christopher P.L. Barkan, *Safety Effectiveness of Integrated Risk Reduction Strategies for the Transportation of Hazardous Materials by Rail*, paper presented at the Transportation Research Board, Annual Meeting 2013, paper no. 13-1811.

In February 2014, the U.S. DOT reached an agreement with railroads under which they would voluntarily take measures to improve the safety of oil trains.[72] These measures include adding braking power; reducing train speeds to 40 mph through certain urban areas starting July 1 for trains with at least 20 tank cars of crude oil and at least one tank car of the older DOT-111 standard; installing additional wayside wheel bearing detectors by July 1; and other actions. Some of the measures the railroads agreed to are similar to those that the industry already takes for trains carrying "toxic-by-inhalation" hazardous materials. They also are similar to those the U.S. DOT proposed in its August 2014 notice of proposed rulemaking (NPRM) to increase the safety of oil trains.[73]

Tank Car Safety Design

The U.S. DOT establishes construction standards for tank cars.[74] A tank car used for oil transport is roughly 60 feet long, about 11 feet wide, and 16 feet high (see **Figure 4**). It weighs 80,000 pounds empty and 286,000 pounds when full. It can hold about 30,000 gallons or 715 barrels of oil, depending on the oil's density. The tank is made of steel plate, 7/16 of an inch thick (see 49 C.F.R. §179.201).[75] An oil tank car is typically loaded from the top valve and unloaded from the bottom valve. Loading or unloading each car may take several hours, but multiple cars in a train can be loaded or unloaded simultaneously.

Figure 4. Non-jacketed, Non-pressure Tank Car

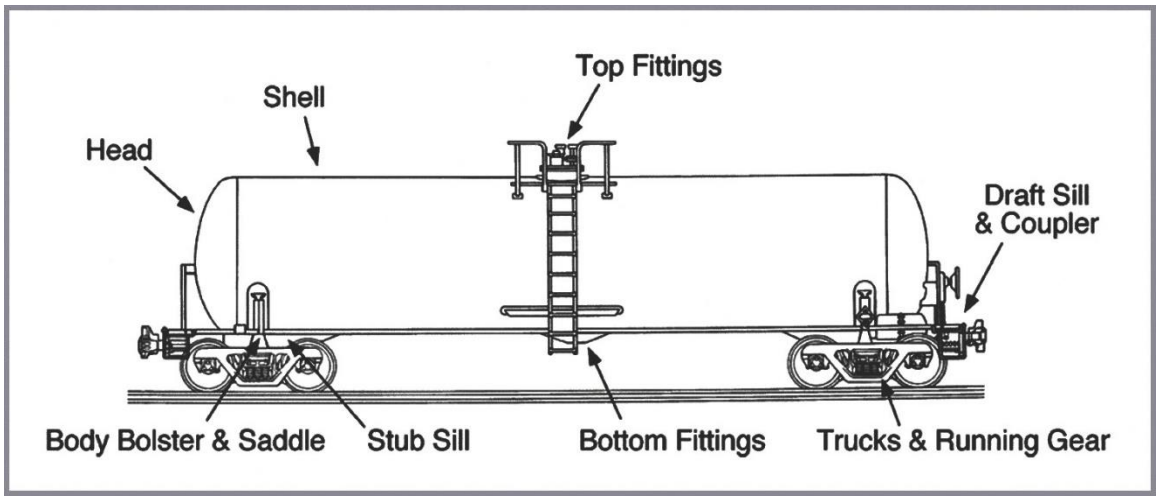

In some incidents, oil has been released from tank cars because the coupler from a neighboring car punctured the tank during derailment. Valves at the top and bottom of the cars have also been sheared off or otherwise opened during derailment. Efforts to improve crashworthiness have focused on reinforcing the shells of tank cars at both ends and/or along the sides with a "jacket" of steel, adding protective head shields at both ends, modifying couplers to prevent decoupling,

[72] AAR, "Freight Railroads Join U.S. Transportation Secretary Foxx in Announcing Industry Crude By Rail Safety Initiative," February 21, 2014.

[73] 79 *Federal Register* 45016-45079 (August 1, 2014); http://www.regulations.gov, docket no. PHMSA-2012-0082. The comment period closed September 30, 2014; 3,304 separate comments were filed.

[74] The tank cars used to transport crude oil fall under DOT specification 111. See 49 C.F.R. §179.

[75] 49 C.F.R. §179.201.

adding skid protection or diversion shields to protruding valves and modifying pressure relief valves, eliminating or modifying bottom valves so that handles break off rather than opening the valve during derailment, and increasing insulation for fire protection.[76]

The FRA and PHMSA have questioned whether Bakken crude oil, given its characteristics, would more properly be carried in tank cars that have additional safety features, such as those found on pressurized tank cars used for hauling explosive liquids.[77] The railroad industry established additional standards in October 2011 for newly built cars that address some but not all of the safety features that the FRA and PHMSA are considering. Railroads, shippers, and tank car builders have not reached agreement on a replacement standard. Rail cars have an economic life of 30 to 40 years, so conversion of the fleet to a new car standard could take some time.

DOT has asked for further information on the costs and benefits of retrofitting the existing fleet.[78] In November 2013, the Association of American Railroads stated it supports either retrofitting or phasing out oil tank cars built before October 2011 (a fleet of about 78,000 cars) and modifying those built after October 2011 (about 14,000 cars).[79] Some Members of Congress have urged DOT to expedite the rulemaking process concerning new tank car safety requirements.[80]

In February 2014, BNSF announced that it would purchase 5,000 tank cars with safety features that surpass those specified in the October 2011 industry standard (shell thickness would be 9/16 of an inch thick, and they would be jacketed). In April 2014, Transport Canada announced that the oldest DOT-111 tank cars (about 5,000 that lack bottom reinforcement) would no longer be allowed for use in transporting dangerous goods, and the remaining fleet would either be phased out or retrofitted within three years.[81]

In its August 1, 2014, NPRM,[82] the U.S. DOT proposed three options for tank cars built after October 1, 2015: (1) construct with 9/16 inch steel and equip with electronically controlled pneumatic (ECP) brakes (an advanced braking technology), (2) construct with 9/16 inch steel but not with ECP brakes, or (3) construct to the October 2011 industry standard and adopt this as the regulatory standard also. Comments filed in response to the NPRM indicate, among other things, that there is substantial disagreement over the rate at which older tank cars could be retrofitted.[83] U.S. railroads contend that U.S. DOT's proposal is not in harmony with Canada's proposed tank car standards.[84]

---

[76] For a discussion of NTSB's recommendations concerning DOT-111 tank cars, in reference to the derailment of an ethanol unit train in Cherry Valley, IL, see NTSB Safety Recommendation R-12-5 through -8, March 2, 2012.

[77] Pressurized tank cars (DOT specification 105 and 112) have thicker shells and heads, metal jackets, strong protective housings for top fittings, and no bottom valves.

[78] 78 F.R. 54849-54861, September 6, 2013.

[79] For comments filed on this rulemaking see http://www.regulations.gov and search under docket no. PHMSA-2012-0082.

[80] See letter from Senator Schumer to PHMSA and FRA dated July 22, 2013, and news release by Senator Hoeven on January 15, 2013, indicating that a DOT final rule on tank cars would not be issued until after January 2015.

[81] Transport Canada, "Addressing the safety of DOT-111 tank cars carrying dangerous goods," April 23, 2014.

[82] 79 *Federal Register* 45016-45079 (August 1, 2014).

[83] See comments filed by the American Petroleum Institute, September 30, 2014; http://www.regulations.gov, docket no. PHMSA-2012-0082.

[84] See comments filed by the Association of American Railroads, September 30, 2014; http://www.regulations.gov, docket no. PHMSA-2012-0082.

Preventing Derailments

An analysis of freight train derailments from 2001 to 2010 on Class I railroads' mainline track found that broken rails or track welds were the leading cause of derailments, by far.[85] These problems caused 670 derailments over the period, while the next leading problem (track geometry defects) caused just over 300 derailments. Broken rails or welds also resulted in more severe incidents, derailing an average of 13 railroad cars instead of 8.6 cars for all other causes. Broken rails or welds accounted for 23% of total cars derailed. A separate study covering the same time period found that track problems were the most important causes of derailments, followed by problems with train equipment.[86]

In the Rail Safety Improvement Act of 2008 (P.L. 110-432, Section 403(a)), Congress requested that the FRA study and consider revising the frequency and methods of track inspection. The FRA conducted the study and on January 24, 2014, issued a final rule on improving rail integrity.[87] The new rule requires railroads to achieve a specified track failure rate rather than scheduling inspections based on the calendar or traffic volume. It also allows railroads to maximize use of rail inspection vehicle time by prioritizing remedial action when track defects are detected. While the rule requires railroads to achieve a lower track failure rate for track that has higher speed limits, or carries passengers or hazardous material, it does not require lower failure rates for track travelling through populated areas or otherwise consider the affected area around the track in the event of a derailment.[88]

The final rule states that it "codifies standard industry good practices," and notes that railroads "were already initiating and implementing the development of a performance-based risk management concept for determination of rail inspection frequency," meaning that railroads generally have been testing more frequently than required.[89] Large railroads divide their network into hundreds of segments, and determine inspection frequency for each segment based on past inspection results, past history of undetected defects, track tonnage, climate (namely temperature), signaling system (or absence) over segment, whether track carries toxic-by-inhalation materials, and whether track is within 500 feet of a structure.[90] They have vehicles to detect defects within the steel of the rail, and others that detect defects in track geometry. From 1980 to 2012, railroads reduced the number of accidents releasing hazmat product per 100,000 hazmat carloads from 14 to 1.[91]

As part of the February 2014 agreement with DOT referenced above, railroads will perform one additional internal-rail inspection each year than required by the FRA on routes over which trains carrying 20 or more tank cars of crude oil travel, and will conduct at least two high-tech track

[85] T87.6 Task Force Summary Report, pp. 9-11; Xiang Liu, M. Rapik Saat, Christopher P.L. Barkan, "Analysis of Causes of Major Train Derailment and Their Effect on Accident Rates," *Transportation Research Record*, No. 2289, 2012, pp. 154-163.

[86] Xiang Liu, M. Rapik Saat, Christopher P.L. Barkan, *Safety Effectiveness of Integrated Risk Reduction Strategies for the Transportation of Hazardous Materials by Rail*, Paper presented at the Transportation Research Board, Annual Meeting 2013, paper no. 13-1811.

[87] 79 *Federal Register* 4234, January 24, 2014.

[88] Xiang Liu, *Broken* "Rail Prevention and Rail Flaw Assessment," presentation at Transportation Research Board Annual Meeting, Washington, DC, January 13, 2014.

[89] 79 *Federal Register* 4234 and 4245, January 24, 2014.

[90] Presentations of BNSF and UP Railroads, Transportation Research Board Annual Meeting, Washington, DC, January 13, 2014, Session 279, *Broken Rail Prevention and Rail Flaw Assessment*.

[91] Christopher P.L. Barkan, M. Rapik Saat, and Francisco Gonzalez III et al., "Cooperative Research in Tank Car Safety Design," *TR News*, vol. 286 (May-June 2013), pp. 12-19.

geometry inspections over these routes. Congress may want to look into research on track defect detection technology, including the feasibility of installing equipment on locomotives to achieve near-continuous rail testing.[92]

Shortline Track

It is often the case that a Class I railroad, prior to turning over the operation of a line to a shortline, did not maintain it to the same standards as busier mainlines. Shippers using a shortline often do not require higher-speed track because they ship infrequently or because the commodities they ship are not time-sensitive. Thus, shortline track is frequently maintained at a lower standard than Class I railroads' track. The Lac Mégantic, Quebec, and Aliceville, AL, crude oil derailments occurred on shortline track. Members of Congress have been concerned with preserving shortline rail service, reflected in a federal loan program for track rehabilitation and improvement and a tax credit for shortline track maintenance.[93]

Railroad Operations

A number of specific operational issues have been found relevant to railroad safety, in general, or to oil by rail transportation specifically.

Train Speed and Braking Systems

Reducing train speed can reduce the number of cars that derail, as well as the likelihood that product will be released.[94] In its August 1, 2014, NPRM,[95] the U.S. DOT proposed that crude oil unit trains be restricted to 50 mph if all tank cars in the train comply with the proposed new standard. For cars not complying with the new standard, speed would be restricted to 40 mph either in all areas or just in urban areas. Trains without enhanced braking systems would be restricted to 30 mph, an accommodation for shortline railroads. Railroads oppose the proposed speed restrictions, arguing that they would severely degrade service for other trains.[96]

In its August 1 NPRM, the U.S. DOT also proposed that crude oil unit trains either use cars equipped with ECP brakes, as mentioned above, or contain another locomotive toward the rear of the train (remotely controlled by the crew in the lead locomotive) or an end of train device (EOT), which are two other methods for sending brake signal commands faster to all the cars in a train. The intent is to reduce the speed of cars upon derailment, but the latter two methods are more effective when the derailment occurs toward the front of the train.[97] Railroads contend that the costs of ECP brakes far outweigh the benefits.[98]

---

[92] This topic was briefly discussed at the NTSB forum on rail safety cited above. Advances in detecting internal rail flaws are focused on increasing testing speeds, shrinking the size of detectable flaws, and improving the training of testing operators; "Tracking Down Rail Flaws," *Railway Track and Structures*, January 2011, pp. 19-22.

[93] The Railroad Rehabilitation and Improvement Financing (RRIF) program and Section 45G of the tax code.

[94] Athaphon Kawprasert and Christopher P.L. Barkan, "Effect of Train Speed on Risk Analysis of Transporting Hazardous Materials by Rail," *Transportation Research Record*, No. 2159, 2010, pp. 59-68.

[95] 79 *Federal Register* 45016-45079 (August 1, 2014).

[96] See comments filed by the Association of American Railroads, September 30, 2014; http://www.regulations.gov, docket no. PHMSA-2012-0082.

[97] In a separate NPRM (79 *Federal Register* 53356-53383, September 9, 2014), U.S. DOT addressed brake application systems for securing unattended parked trains, which was the issue in the Lac Mégantic, Quebec, incident (see text box).

[98] See comments filed by the Association of American Railroads, September 30, 2014; http://www.regulations.gov,

Railroad Crew Size

Following the Lac Mégantic disaster, legislation (H.R. 3040) was introduced in Congress to require two-person crews on all trains. In the United States, the FRA does not specify in regulation how many persons must operate a train, but notes that the various tasks required while a train is moving essentially necessitate at least a two-person crew. Most trains operate with an engineer and a conductor, but some shortline railroads may operate trains with a single crew member. In April 2014, the FRA announced it intended to issue a proposed rule requiring two-person crews (allowing for some exceptions), but this has not occurred as of yet.[99] One potential trade-off is that distraction by a fellow crew member has been found to be a factor in past accidents.[100]

Positive Train Control

Railroads are in the process of implementing positive train control (PTC), a system that is designed to override human error in controlling the speed and movement of trains. Congress required that this system be installed on routes carrying passengers or poison- or toxic-by-inhalation hazardous materials (Section 104 of P.L. 110-432), a requirement that applies to about 60,000 miles of railroad. Current law does not require installation of PTC solely because a track carries crude oil, but the law authorizes the FRA to expand the scope of tracks required to have PTC. PTC is not required on track in or near rail yards. The cost and timeline for implementing PTC are topics of current debate among policy makers and stakeholders.[101]

Route Selection

In the Implementing Recommendations of the 9/11 Commission Act of 2007 (P.L. 110-53, Section 1551), Congress required railroads carrying certain kinds and quantities of potentially dangerous commodities to assess the safest and most secure routes for trains carrying these products and to minimize delays and storage for rail cars containing these products. These requirements currently apply to explosive, toxic-by-inhalation, and radioactive material.[102] Security regulations also require that rail cars containing these commodities not be left unattended when being transferred from one carrier to another or between carrier and shipper.[103] The law resulted from efforts by cities like Washington, DC, and Pittsburgh to ban trains carrying hazardous materials.[104] The FRA is proposing that this routing analysis also apply to unit trains of crude oil.[105] As part of the February 2014 agreement with DOT mentioned above, railroads agreed to perform this routing analysis for oil trains beginning July 1, 2014.

---

docket no. PHMSA-2012-0082. ECP brakes were proposed by the FRA in a 2008 rulemaking; 73 *Federal Register* 61512 (October 16, 2008).

[99] Press Release no. FRA-03-14, April 9, 2014.

[100] NTSB, *Collision of Two CN Freight Trains, Anding, Mississippi, July 10, 2005*, Accident Report RAR-07/01, p. 31.

[101] For further information, see CRS Report R42637, *Positive Train Control (PTC): Overview and Policy Issues*, by John Frittelli.

[102] See 49 C.F.R. §172.820; 73 *Federal Register* 72182, November 26, 2008.

[103] See 49 C.F.R. §1580.107.

[104] *U.S. Rail News*, June 11, 2008, pp. 1-2; "Hazmat Hazards: U.S. Cities may not wait for Washington Before Trying to Reroute their own hazmat trains," *Journal of Commerce*, December 12, 2005.

[105] 79 *Federal Register* 45042, August 1, 2014. The NTSB has recommended this change; see Safety Recommendation R-14-1 through -3, January 23, 2014.

Incident and Oil Spill Response

The increased use of rail for crude oil shipments is likely to increase the number of incidents, some of which may involve oil spills. As described above, the National Oil and Hazardous Substances Contingency Plan provides a framework for federal, state, and local collaboration in response to releases of oil and hazardous substances. Considering the relative proximity of rail shipments to population centers, a potential issue for Congress is the safety and adequacy of spill response.

In addition, based on past history, increased frequency or severity of incidents related to shipments of crude oil by rail could lead some local communities to seek additional funding to ensure adequate spill response capabilities, including personnel, training, equipment, and community notification.

The Accuracy of Train Cargo Information

Crude oil may sometimes be carried by "mixed trains"—trains carrying a variety of different commodities. With mixed trains, it is important to first responders that they have an accurate list of which cars contain what commodities (the train "consist"). Often the sequencing of cars changes en route, so the consist information provided by the crew at the scene of an incident may no longer be accurate. Although all vehicles containing hazardous materials must display placards indicating their potential dangerous characteristics (e.g., flammable, corrosive, explosive), responders often need more specific information about the commodities involved in an incident. One potential remedy under consideration is an electronic manifest system that would offer the capability of easier updates. In MAP-21, Congress authorized PHMSA to conduct pilot projects on paperless hazmat information sharing among carriers (of various modes including rail) and first responders.[106] A potential drawback raised by the railroads is that electronic devices at the scene of an incident could encounter technical problems. Another remedy is greater diligence by railroad crew in keeping the paper consist up to date. The NTSB has asked whether a copy of the consist should also be kept at the end of a train in case the copy kept by the crew at the head of the train is lost in an incident.

Rail vs. Pipeline Development

Certain rail routings of crude oil could be replaced by reconfiguring the existing pipeline network and constructing additional pipeline capacity. In general, pipelines could provide safer, less expensive transportation than railroads, assuming that pipeline developers are able to assure markets for the oil they hope to carry.

Pipeline development could be particularly important for shipments of crude oil from Canada to the United States. In light of growing Canadian exports, several proposals have been made to expand the cross-border pipeline infrastructure. Of the five major pipelines currently linking Canadian petroleum producing regions to markets in the United States, two (Alberta Clipper and Keystone) began service in 2010. A permit application for a sixth pipeline, Keystone XL, a very large project which would also transport some Bakken crude, was initially submitted in 2008 and is in the final stages of review by the U.S. Department of State.[107] Keystone XL has been the subject of intense scrutiny and debate by Congress, the executive branch, and numerous

[106] Section 33005 of P.L. 112-141.

[107] The construction, connection, operation, and maintenance of a pipeline connecting the United States with a foreign country require executive permission through a Presidential Permit under Executive Orders 11423 and 13337.

stakeholders. The Keystone XL review and approval process is highly contested, and the pipeline's approval remains uncertain.

Other proposed oil pipeline projects, such as the reversal of the Portland-Montreal oil pipeline to enable export of Canadian oil via a marine terminal in Maine, are also encountering greater public scrutiny and opposition. On the whole, the barriers to new oil pipeline approval in any jurisdiction seem to have risen significantly since Alberta Clipper and Keystone were completed.

Shipment of oil by rail is, in many cases, an alternative to new pipeline development. This involves tradeoffs in terms of both transportation capacity and safety. In its ongoing review of the Keystone XL pipeline proposal, the State Department has argued that, if the pipeline is not constructed, additional oil-by-rail capacity will be developed instead. As the State Department's 2014 Final Environmental Impact Statement for the Keystone XL project states,

> In the past 2 years, there has been exponential growth in the use of rail to transport crude oil throughout North America, primarily originating from the Bakken in North Dakota and Montana, but also increasingly utilized in other production areas, including the [Western Canadian Sedimentary Basin]. Because of the flexibility of rail delivery points, once loaded onto trains the crude oil could be delivered to refineries, terminals, and/or port facilities throughout North America, including the Gulf Coast area.[108]

Consistent with this view, both Canadian National Railway and Canadian Pacific Railway reportedly have been pursuing a "pipeline on rails" business strategy, including new track investments, to move Canadian crudes to new markets throughout North America.[109] Increasing cross-border movements of crude oil by rail on existing track does not require State Department approval, so such an approach seeks to avoid regulatory delays. While the potential volumes associated with rail transportation of crude could be lower than pipeline volumes, they could still be significant. Some analysts have suggested that oil-by-rail volumes could be large enough to make a major new pipeline project like Keystone XL unnecessary.[110] Similar arguments could apply to other oil transportation corridors within North America.

Others are less certain that oil by rail can substitute so readily for pipeline capacity, as rail expansion would require significant infrastructure development including loading and unloading facilities, track capacity, and, possibly, additional tank car availability. The State Department's analysis finds that under certain conditions, including particular oil and oil transportation prices, "there could be a substantial impact on oil sands production levels."[111] Other market analyses similarly find that in the short and medium term some production could be curtailed.[112]

Refiner economics may ultimately favor pipelines over rail, although those investment decisions will be determined by market forces. When it comes to safety, however, the federal government plays a major role, and thus may have considerable influence on infrastructure expansion. On balance, it seems likely that policies that raise the cost of transporting oil by rail would increase the attractiveness of pipeline development, and, for that matter, expansion of crude oil transportation by barges, tanker ships, and tanker trucks.

---

[108] U.S. Department of State, January 2014, Final EIS, Section 5.1, "No Action Alternatives."

[109] Nathan Vanderklippe, "CN, CP Push for a 'Pipeline on Rails,'" *Globe and Mail*, February 7, 2011.

[110] "Keystone Pipeline Seen as Unneeded as More Oil Moves by Rail," *CBC News*, September 10, 2013.

[111] 2014 Final EIS, p. 1.4-8.

[112] For example, Canadian Imperial Bank of Commerce, "Too Much of A Good Thing: A Deep Dive Into The North American Energy Renaissance," August 15, 2012; TD Economics, "Pipeline Expansion is a National Priority," Special Report, December 17, 2012; International Energy Agency," Medium-Term Oil Market Report," May 14, 2013.

Rail vs. Waterborne Transport

As indicated above, the cost of transporting oil along the coasts in Jones Act tankers is much less than by railroad. However, the fleet of Jones Act-qualified tankers is insufficient to take advantage of this lower-cost shipping method. Despite the domestic oil boom, coastal refineries continue to rely on foreign sources of oil that are shipped at rates generally ranging from less than a dollar per barrel (Mexico to the Gulf Coast) to less than $2.50 a barrel (Saudi Arabia to the Atlantic Coast).[113]

In addition to efficient transport, safety is a concern. Tankers are not a new transport method. Tankers are double-hulled, operators are required to have resources and equipment nearby in case of a spill, and the Coast Guard has a regulatory regime in place to promote safe transits through harbors. While the risk of an oil spill in a marine environment remains a grave concern, coastal transport largely avoids travel through towns and cities. The railroads have had difficulty in dealing with the surge in oil traffic, and other rail users are experiencing severe service disruptions in the upper Midwest. An important but open question is whether more oil would be moving by coastwise shipping, relieving some of the safety and capacity pressure on railroads, if tankers were available and their operating costs more competitive. The CEO of Phillips 66 has stated, "I think our view is that because of the limitations on Jones Act vessels, that's going to push you to more barge and more rail, just to evacuate the Gulf Coast."[114]

Rail Transport and Crude Oil Exports

The large increase in U.S. oil production has led some Members of Congress to advocate changing the law that generally prohibits exports of crude oil.[115] An increase in crude oil exports would likely require greater use of rail transportation, as the crude oil pipeline network is not oriented to serve export ports. Some environmental groups have stated their opposition to construction of new rail facilities or terminals that would facilitate oil exports, as they believe increased exports will encourage environmentally damaging production in the United States and Canada.[116]

[113] Platts, *Oilgram Price Report*, January through November 2014.

[114] Phillips 66 Earnings Conference Call, Q2 2013, July 31, 2013.

[115] The Senate Energy and Natural Resources Committee held a hearing on this issue on January 30, 2014. For further information and analysis on oil exports, see CRS Report R43442, *U.S. Crude Oil Export Policy: Background and Considerations*, by Phillip Brown et al.

[116] See, for example, the comments of Sierra Club official Michael Marx in Blake Sobczak, "Environmentalists 'get real creative' to combat oil by rail," *Energy Wire*, January 13, 2014.

Author Information

John Frittelli
Specialist in Transportation Policy

Jonathan L. Ramseur
Specialist in Environmental Policy

Paul W. Parfomak
Specialist in Energy and Infrastructure Policy

Michael Ratner
Specialist in Energy Policy

Robert Pirog
Specialist in Energy Economics

Acknowledgments

Anthony Andrews, former Specialist in Energy Policy, made significant contributions to this report. John Williamson, former Information Research Specialist, assisted in researching topics covered in this report. Amber Hope Wilhelm, Graphics Specialist, helped prepare many of the figures in this report.

Disclaimer

This document was prepared by the Congressional Research Service (CRS). CRS serves as nonpartisan shared staff to congressional committees and Members of Congress. It operates solely at the behest of and under the direction of Congress. Information in a CRS Report should not be relied upon for purposes other than public understanding of information that has been provided by CRS to Members of Congress in connection with CRS's institutional role. CRS Reports, as a work of the United States Government, are not subject to copyright protection in the United States. Any CRS Report may be reproduced and distributed in its entirety without permission from CRS. However, as a CRS Report may include copyrighted images or material from a third party, you may need to obtain the permission of the copyright holder if you wish to copy or otherwise use copyrighted material.